ELECTRICAL NOTES:

1. All work shall be completed in accordance with the National Electric Code, State Building Code and all other applicable state and local codes.
2. All work shall be approved by state and local inspectors having jurisdiction
3. All wiring shown is diagrammatic only. The exact method and support shall be coordinated in the field with the other trades
4. The Contractor is responsible for verification of existing fixtures, switches, circuits, measurements and coordination with all other trades
5. All wiring shall be concealed where possible. If exposed, provide "wire mold" one piece surface mounted steel raceway as approved by the Architect. Provide all necessary "wire mold" accessories.
6. The Contractor shall apply and be responsible for obtaining a State of Vermont Electrical Permit.

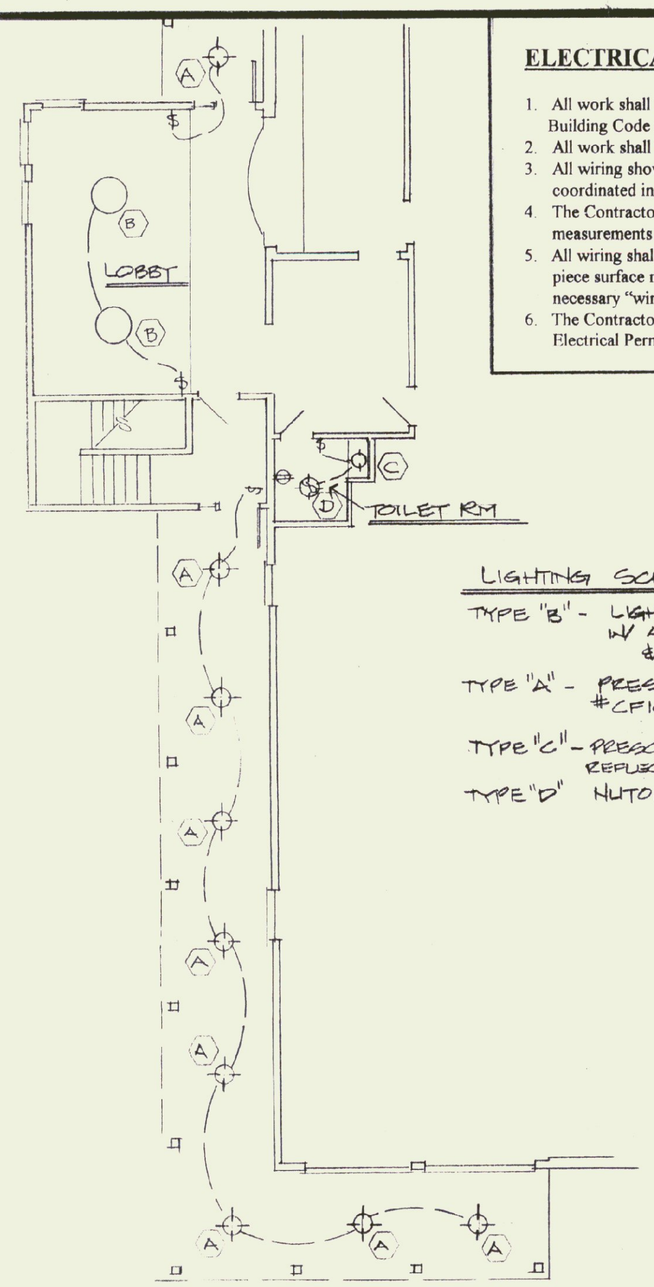

NEW LIGHTING LAYOUT

1/8" = 1'-0"

LIGHTING SCHEDULE

TYPE "B" - LIGHTCONTROL P-1-2700 "CIRCA" W/ ACCF SUSPENSION & 4-CF39 LAMPS

TYPE "A" - PRESCOLITE 8" SQ W/ 2-18W QUAD #CF1018SQS-1-HPF-TRQ-TLG.

TYPE "C" - PRESCOLITE 18XTP-TO-8 OPEN REFLECTOR DOWNLIGHT - 75W E-30

TYPE "D" NUTONE # QTK01 FAN-LIGHT

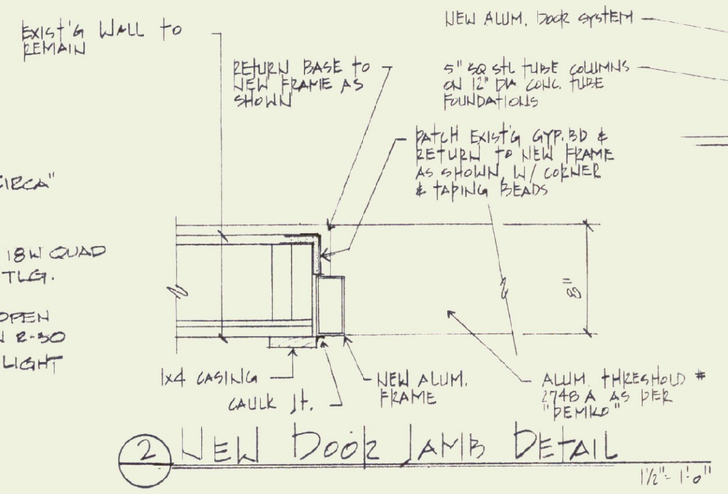

2 NEW DOOR JAMB DETAIL

1½" = 1'-0"

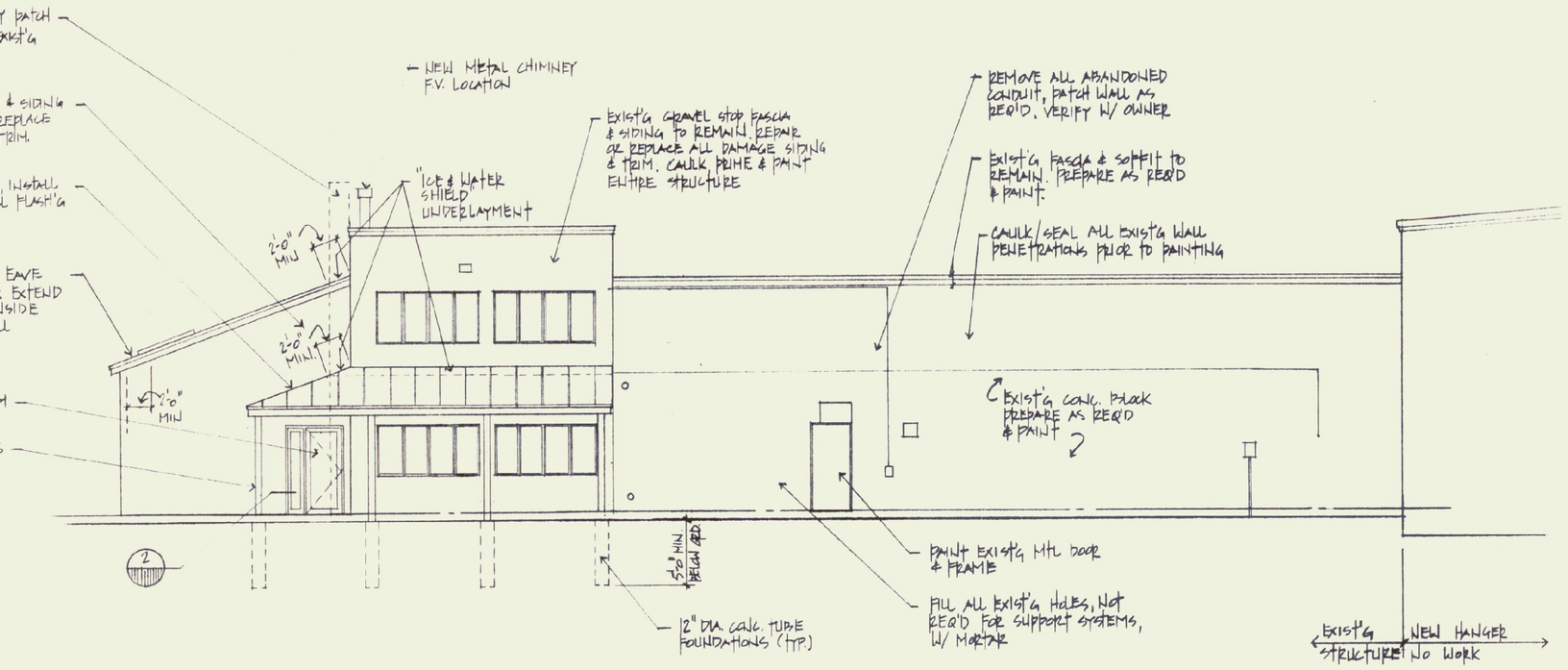

SOUTH ELEVATION

1/8" = 1'-0"

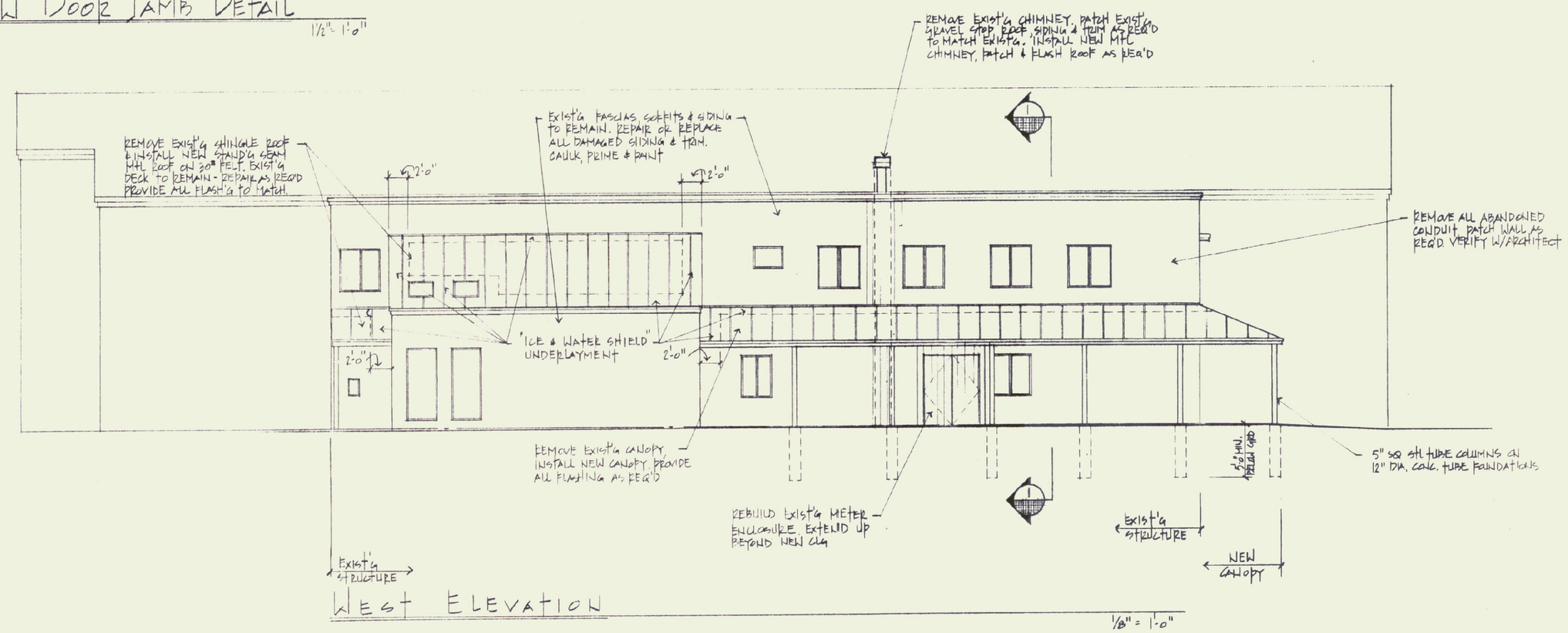

WEST ELEVATION

1/8" = 1'-0"

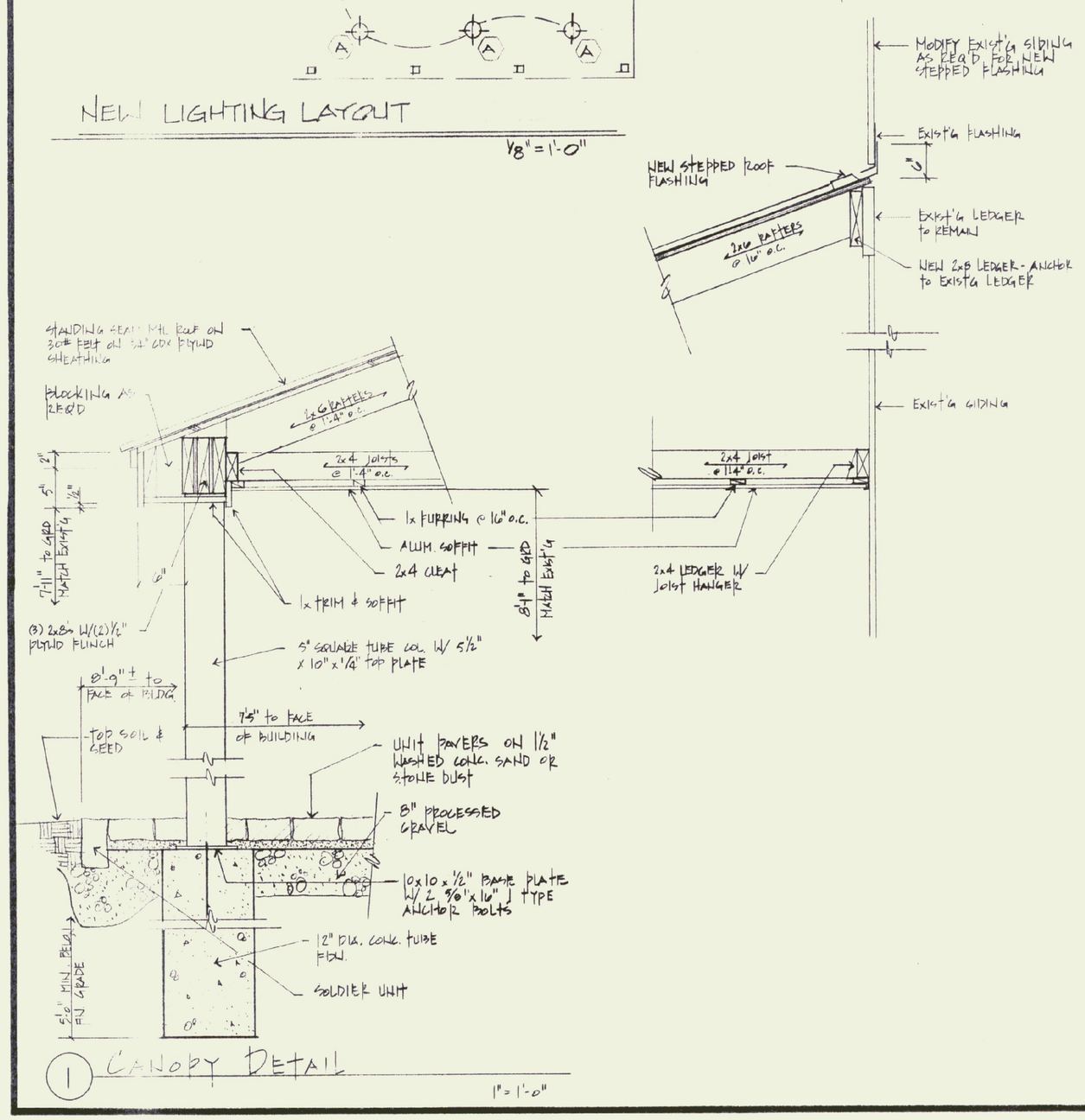

1 CANOPY DETAIL

1" = 1'-0"

Note:
"ICE & WATER SHIELD UNDERLAYMENT" SHALL BE MANUF. BY GRACE CONSTRUCTION PRODUCTS, CAMBRIDGE MA. OR APPROVED EQUAL BY ARCHITECT.

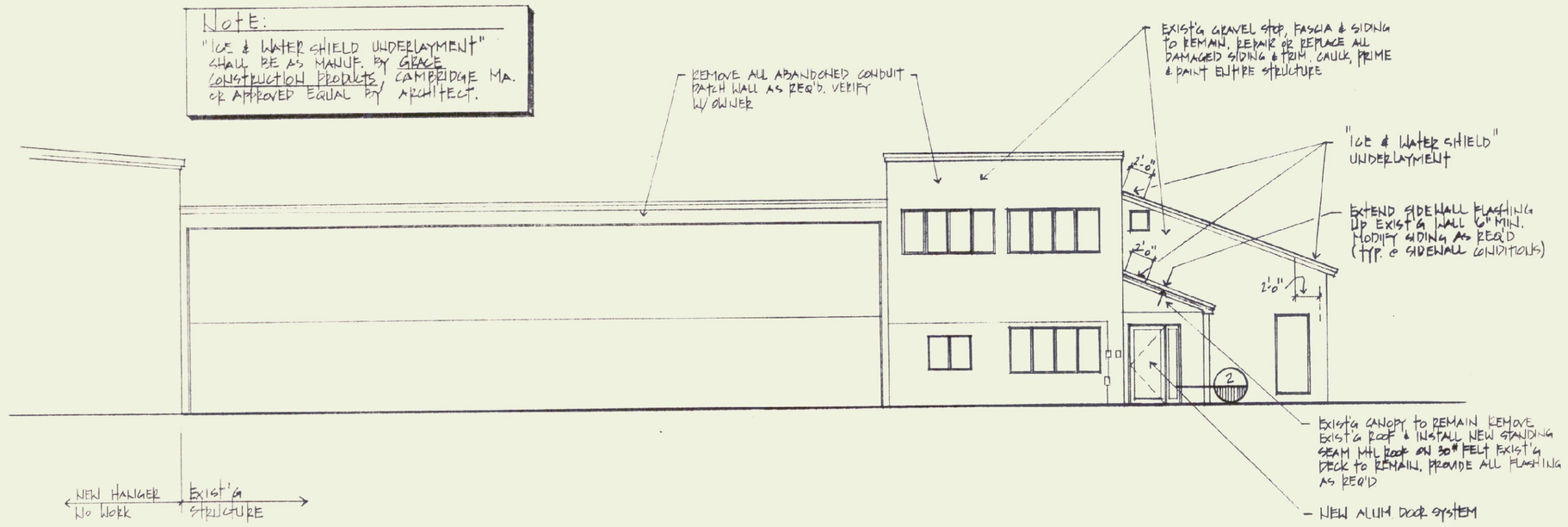

North ELEVATION

1/8" = 1'-0"

Jon A. Traver Associates, Architect
P.O. Box 488
North Bennington, Vermont
(802) 447-1174
13 Bank Street
Vermont 05257
Fax (802) 442-4817

JOB NO.

DATE 14 MAR 2000

DWN. BY: HJ/JT

REGISTERED ARCHITECT JON A. TRAVER NO. 1015 STATE OF VERMONT

Wm. H. Morse State Airport

New Entry Canopy and Renovations

Airport Rd. Bennington, Vermont

DRAWING: ELEVATIONS, DETAILS, ELECTRICAL

A-2

2 OF 2