**NOTES:**

1. TRANSVERSE TIES SHALL BE COVERED BY SEAMLESS POLYPROPYLENE SHEATH (WITH CORROSION INHIBITOR GREASE BETWEEN SHEATH AND STRAND) FOR THE LENGTH OF THE STRAND, EXCEPT AT ANCHORAGE LOCATIONS. TIES SHALL BE TENSIONED TO 30000 LBS.

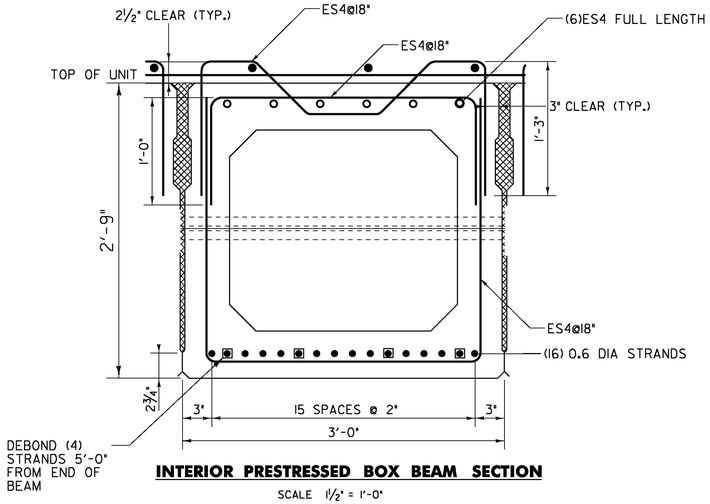


**INTERIOR PRESTRESSED BOX BEAM SECTION**

SCALE 1½" = 1'-0"

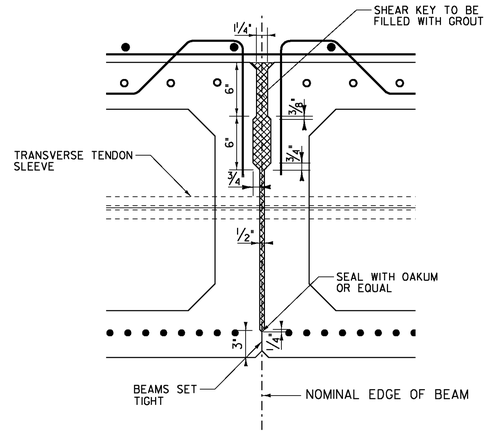


**TYPICAL SHEAR KEY SECTION**

SCALE 1½" = 1'-0"

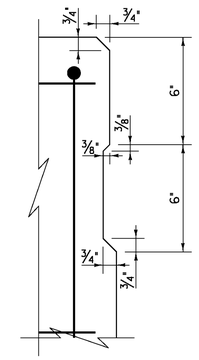


**SHEAR KEY DETAIL**

SCALE 3" = 1'-0"

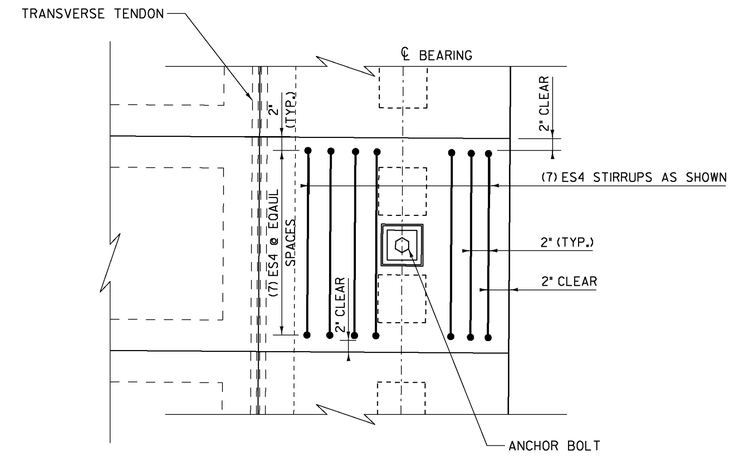


**PRESTRESSED BOX BEAM UNIT END DETAIL PLAN**

SCALE 1" = 1'-0"

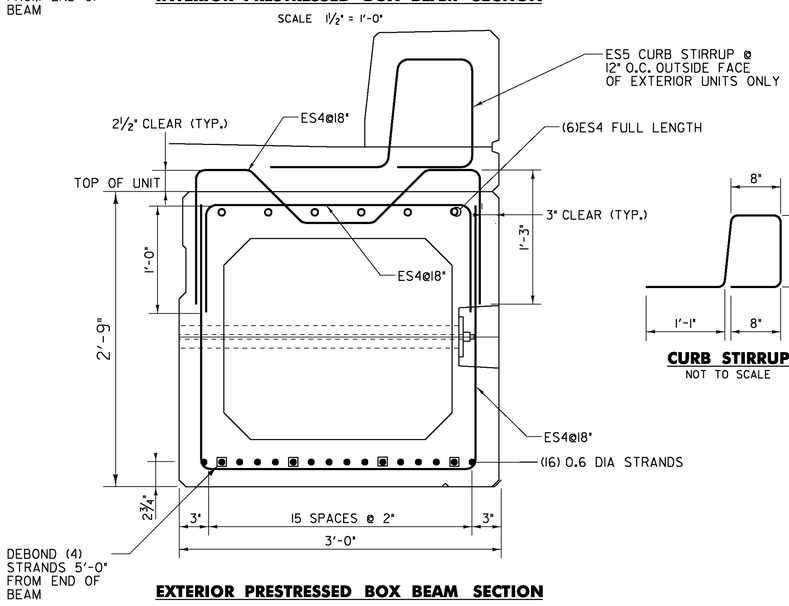


**EXTERIOR PRESTRESSED BOX BEAM SECTION**

SCALE 1½" = 1'-0"

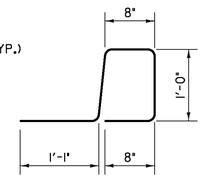


**CURB STIRRUP**

NOT TO SCALE

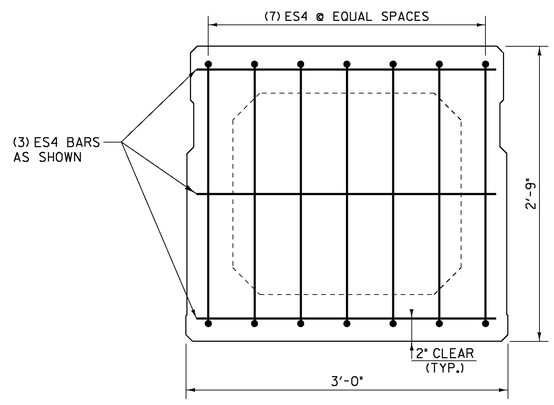


**SECTION A–A**

SCALE 1½" = 1'-0"

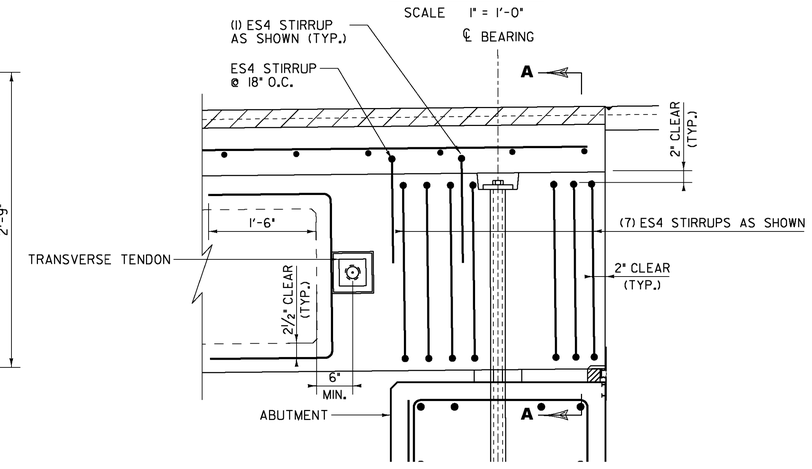


**PRESTRESSED BOX BEAM UNIT END DETAIL ELEVATION**

SCALE 1" = 1'-0"

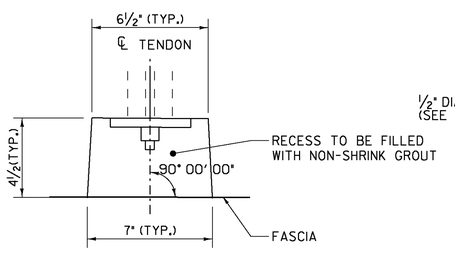


**PLAN OF POCKET**

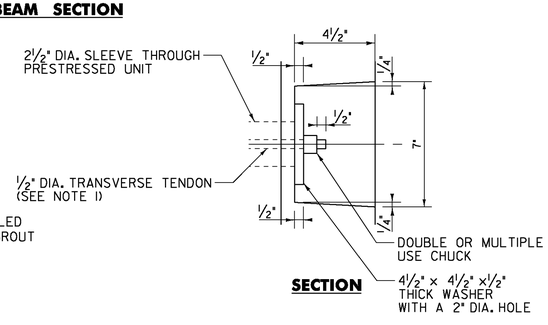


**SECTION**

**TRANSVERSE TENDON DETAIL**

SCALE 3" = 1'-0"

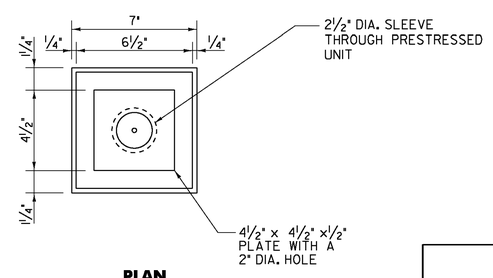


**PLAN**

PLOTTED 10/22/2009

DuBois & King inc.
engineering planning management development

STATE OF VERMONT
AGENCY OF TRANSPORTATION

| | | | |
|---|---|---|---|
| Town Of | STOWE | Bridge No. | 3 |
| Highway No. | T.H. 1 | Log Sta. / Surv. Sta. | |

**MOSCOW ROAD OVER MILLER BROOK**

**PRESTRESSED UNIT DETAILS 2**

| | | | |
|---|---|---|---|
| Designed By | R.H. BARNES | Drawn By | S.J. BIJOLLE |
| Checked By | E.P. DETRICK | Date 5/09 | Bridge Design Supervisor J.W. TUCKER Date 5/09 |
| PROJECT | STOWE | PROJECT NO. | BHO 1446 (30) |
| I.G.C. Info. | ...\DGN\z99J244dt8.dgn | | |
| D & K DWG NO. | | Sheet 25 of 37 | |