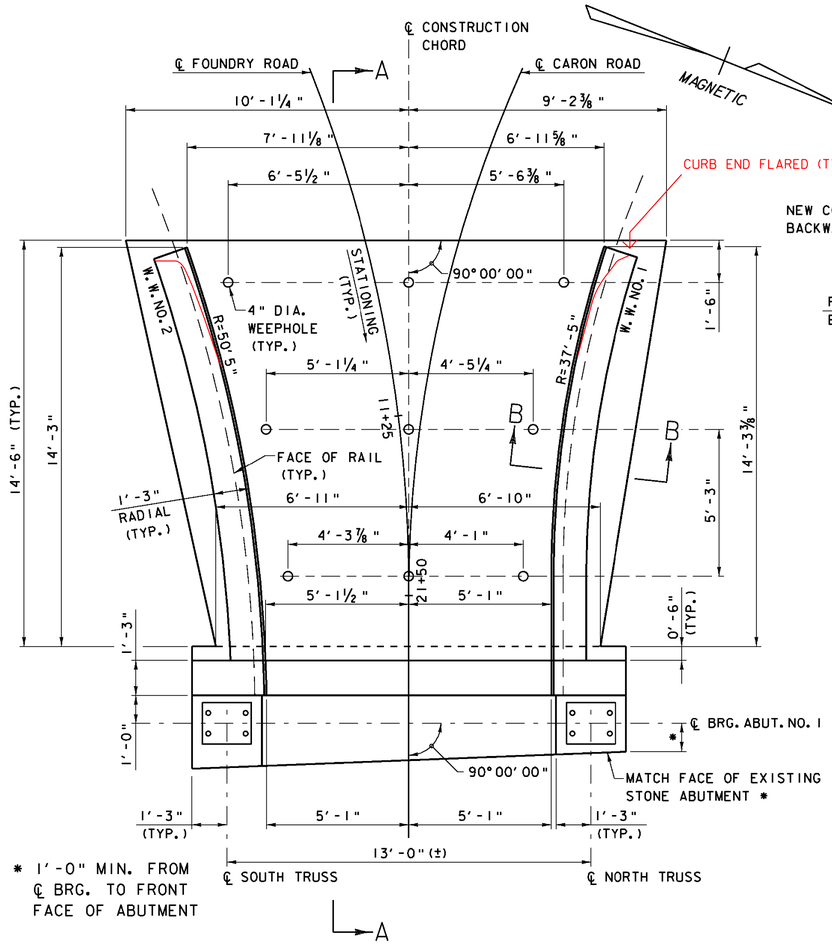

* 1'-0" MIN. FROM ℄ BRG. TO FRONT FACE OF ABUTMENT

TIMBER SILL BEAMS NOT SHOWN IN PLAN VIEW FOR CLARITY.
EXISTING STONE RETAINING WALLS NOT SHOWN FOR CLARITY.

PLAN

SCALE: ⅜" = 1'-0"

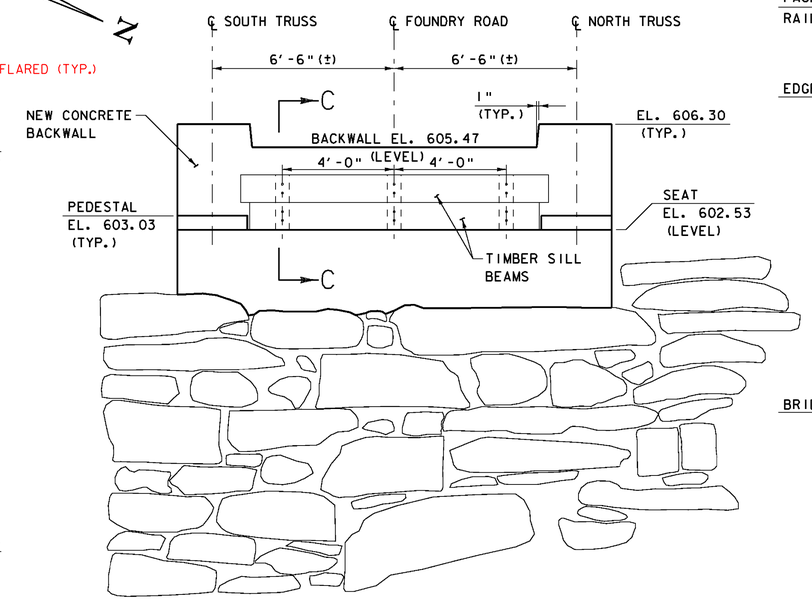

ELEVATION

SCALE: ⅜" = 1'-0"

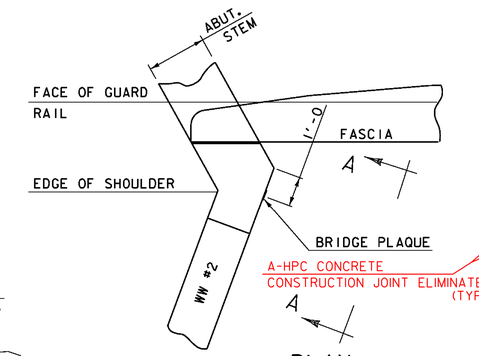

PLAN

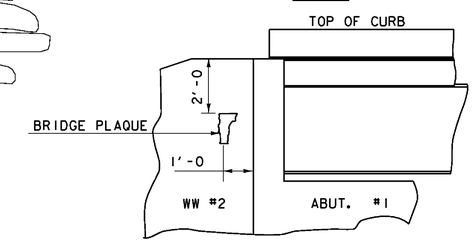

VIEW "A - A"

BRIDGE PLAQUE

(NOT TO SCALE)

THE BRIDGE PLAQUE WILL BE SUPPLIED BY THE AGENCY OF TRANSPORTATION AND SHALL BE INSTALLED BY THE CONTRACTOR AT ABUTMENT #1 ON THE RIGHT SIDE AS SHOWN OR AS DIRECTED BY THE ENGINEER.

PAYMENT FOR INSTALLATION OF THE BRIDGE PLAQUE SHALL BE INCIDENTAL TO THE ADJACENT CONCRETE.

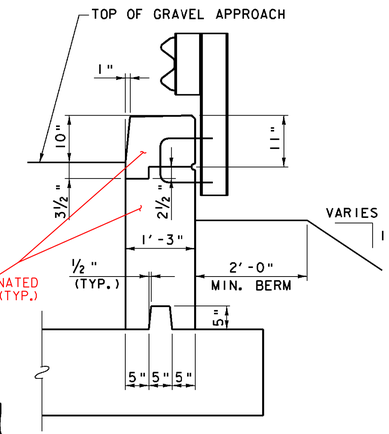

SECTION B-B

(TYPICAL BOTH WINGWALLS)
SCALE: ¾" = 1'-0"

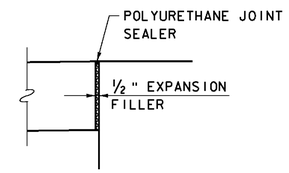

JOINT BETWEEN CAP AND ABUTMENT

(SEE NOTE 2)
SCALE: 1" = 1'-0"

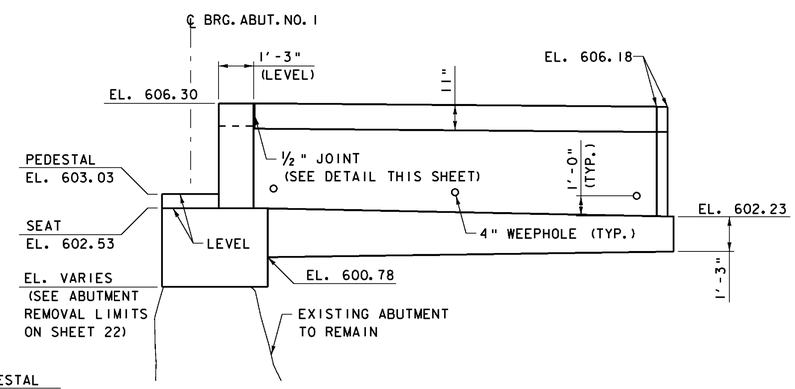

WINGWALL NO. 1 ELEVATION

SCALE: ⅜" = 1'-0"

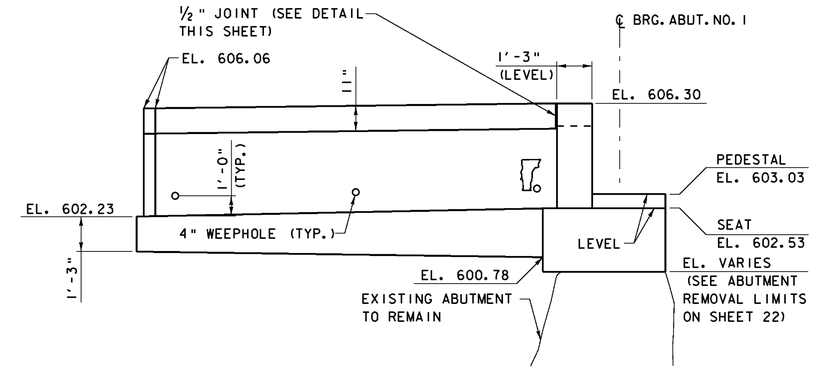

WINGWALL NO. 2 ELEVATION

SCALE: ⅜" = 1'-0"

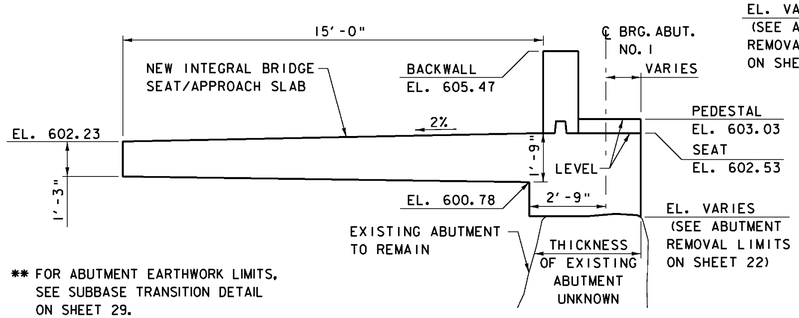

** FOR ABUTMENT EARTHWORK LIMITS, SEE SUBBASE TRANSITION DETAIL ON SHEET 29.

SECTION A-A **

SCALE: ⅜" = 1'-0"

NOTES

1. FOR SECTION C-C, SEE SHEET 25.
2. COST FOR JOINT SEALER AND EXPANSION MATERIAL TO BE INCLUDED IN ITEM 501.34.

SCALE ⅜" = 1'-0
1 0 1 2 3 4

SCALE ¾" = 1'-0
1 0 1 2

SCALE 1" = 1'-0
1 9 6 3 0 1 2

McFarland Johnson

SHEET NAME: ABUTMENT NO. 1 MASONRY	
PROJECT NAME: TUNBRIDGE	
PROJECT NUMBER: BRO 1444 (39)	
FILE NAME: z99J110abl.dgn	PLOT DATE: 26-MAY-2009
PROJECT LEADER: K.M. Higgins	DRAWN BY: P. Dustin
DESIGNED BY: N. Powelson	CHECKED BY: R. Joy
	SHEET 23 OF 32