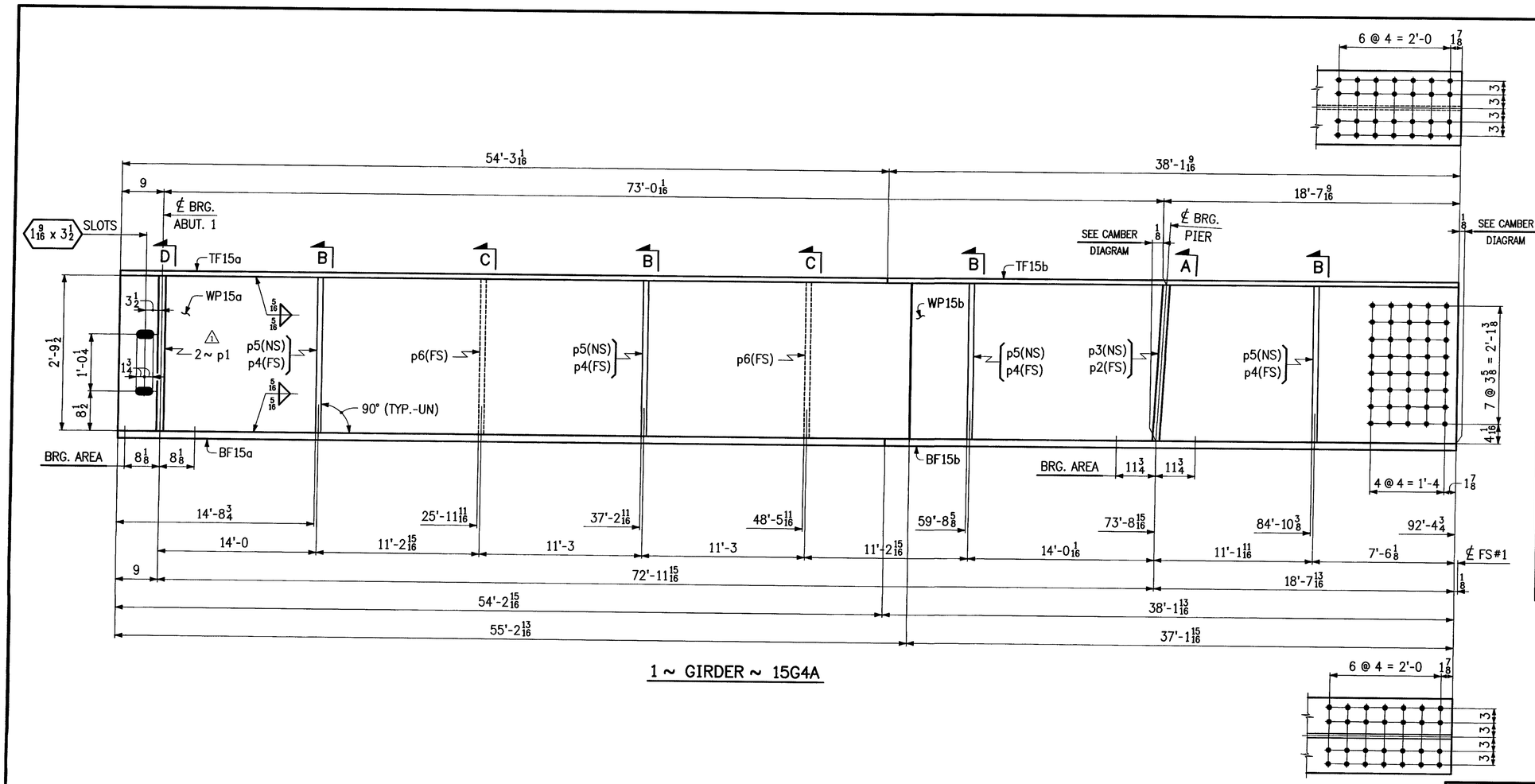

1 ~ GIRDER ~ 15G4A

BILL OF MATERIAL

SHIP MARK	QTY	PIECE MARK	DESCRIPTION	LENGTH FT	LENGTH IN	REMARKS	PAGE LINE
15G4A	1		GIRDER				
	1	WP15a	PL 5/8 x 33 1/2	55	3 1/16	(CVN)	1/1
	1	WP15b	PL 5/8 x 33 1/2	37	1 15/16	(CVN)	1/3
	1	TF15a	PL 1 x 16	54	3 1/16	(CVN)	1/5
	1	TF15b	PL 1 x 16	38	1 9/16	(CVN)	1/6
	1	BF15a	PL 1 1/2 x 16	54	2 15/16	(CVN)	1/9
	1	BF15b	PL 1 1/2 x 16	38	1 13/16	(CVN)	1/10
	1	p2	PL 1 x 8	2	9 1/2	(CVN)	1/8
	1	p3	PL 1 x 8	2	9 1/2	(CVN)	1/8
	4	p4	PL 1/2 x 7	2	9 1/2	(CVN)	1/13
	4	p5	PL 1/2 x 7	2	9 1/2	(CVN)	1/13
	2	p6	PL 1/2 x 7	2	9 1/2	(CVN)	1/13
△1	2	p1	PL 1 x 8	2	9 1/2	(CVN)	1/8

RECEIVED
CK'D BY JEL OK'D BY KMH
JUL 22 2009
RECEIVED APPROVED ✓
BY KMH DATE 7/21/09

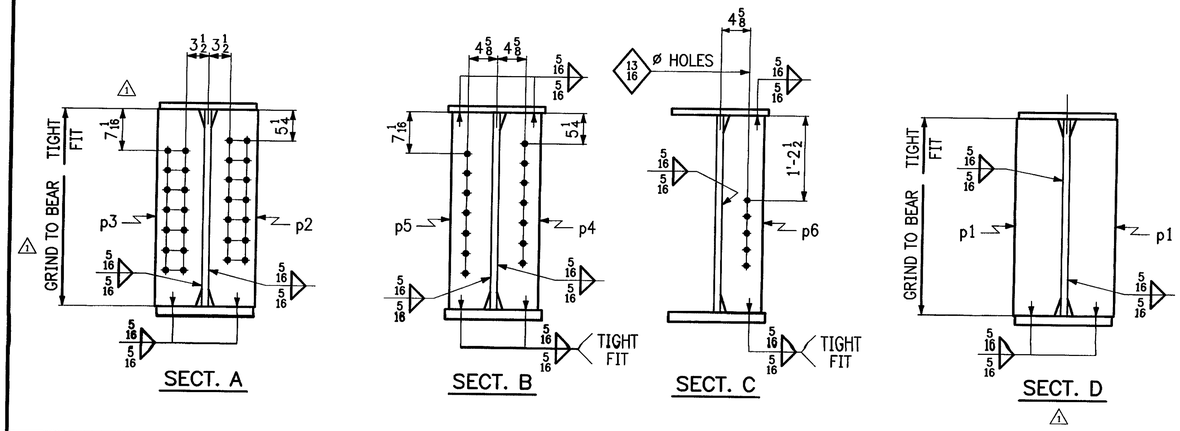

SECT. A SECT. B SECT. C SECT. D

NOTES:

1. FOR GIRDER STANDARDS, SEE SHT. NO. 11.
2. FOR CAMBER DIAGRAM, SEE SHT. NO. 4.
2. FOR GENERAL NOTES, SEE SHT. NO. GN1.

REVISIONS			PRINT RECORD		
NO	DATE	DESCRIPTION	DATE	QTY	ISSUED
			7-16	5p	Appr.
△1	7-14-09	ADDED BRG STIFFS @ ABUT, ADDED SECT D, REMOVED WELD ℄ REV TO GRIND TO BEAR IN SECT A			

MEGQUIER & JONES INC.
STRUCTURAL STEEL SINCE 1895
1156 BROADWAY
SOUTH PORTLAND, MAINE 04106

PAINT: SSPC-SP10	HOLES U N: 15/16ø	WELD U.N	Q C REVIEW
PROJECT: TH NO.1 OVER THE GIHON RIVER PROJECT NO. BHO 1448 (29) BRIDGE NO. 5 TOWN OF JOHNSON, VERMONT			DATE: 6-8-09 DRAWN BY: RLK
DESCRIPTION: GIRDER ~ 15G4A			CHK'D BY: GDC
ARCH: N/A	ENGR: VERMONT AGENCY OF TRANSPORTATION		JOB NO: J-81
CUSTOMER: S.D. IRELAND CONCRETE CONSTRUCTION CORP.			SHT NO: 15

998-9

G4A-998

Sheet 15 - Plotted 07/16/2009 @ 09:32 (HEATHER)