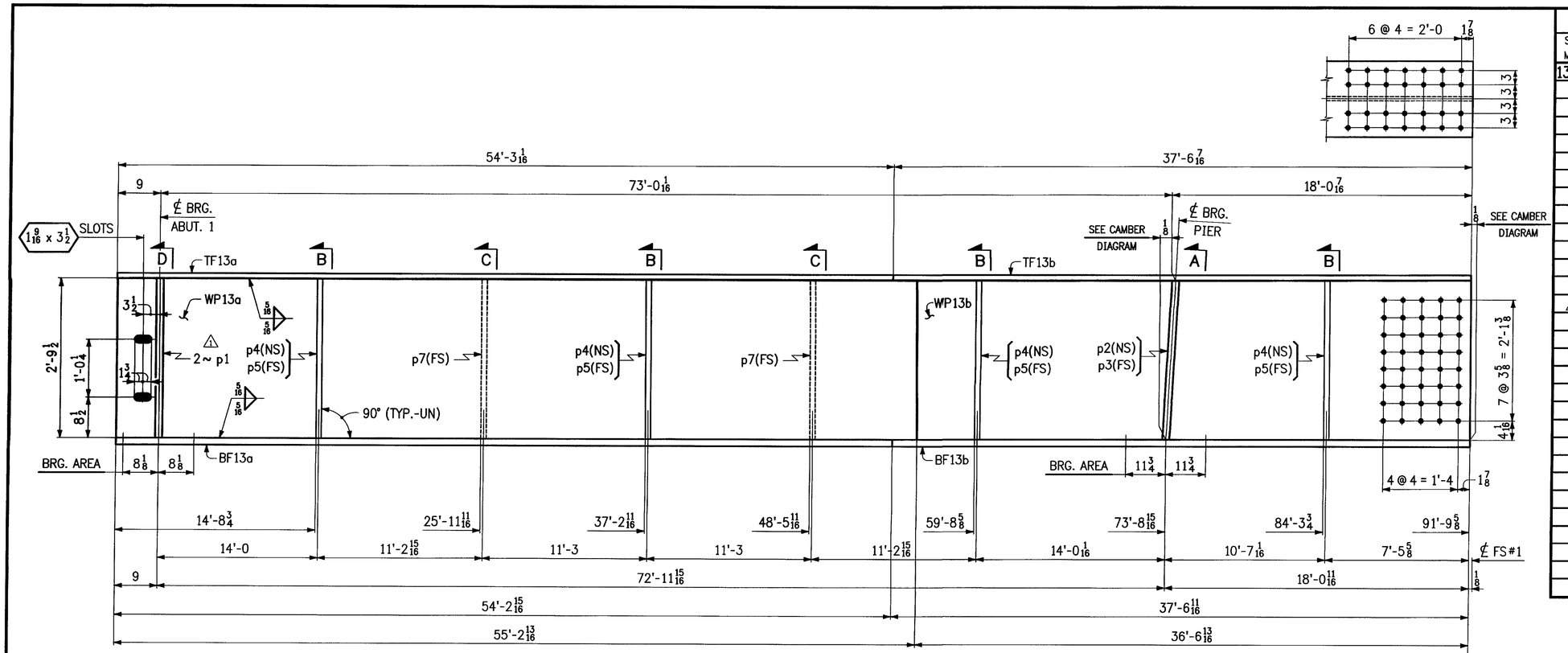

1 ~ GIRDER ~ 13G2A

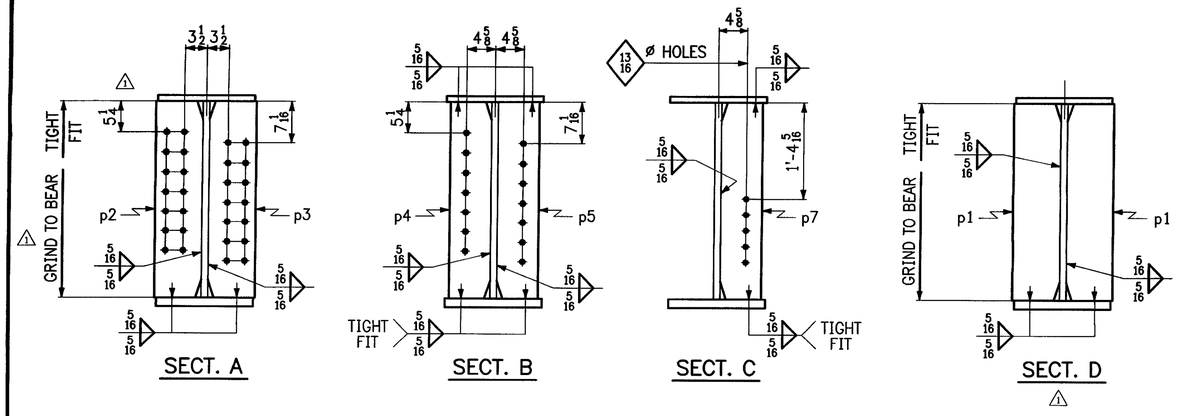

NOTES:

1. FOR GIRDER STANDARDS, SEE SHT. NO. 11.
2. FOR CAMBER DIAGRAM, SEE SHT. NO. 2.
2. FOR GENERAL NOTES, SEE SHT. NO. GN1.

BILL OF MATERIAL

SHIP MARK	QTY	PIECE MARK	DESCRIPTION	LENGTH FT	LENGTH IN	REMARKS	PAGE LINE
13G2A	1		GIRDER				
	1	WP13a	PL 5/8 x 33 1/2	55	3 1/8	(CVN)	1/1
	1	WP13b	PL 5/8 x 33 1/2	36	6 13/16	(CVN)	1/4
	1	TF13a	PL 1 x 16	54	3 1/16	(CVN)	1/5
	1	TF13b	PL 1 x 16	37	6 7/16	(CVN)	1/6
	1	BF13a	PL 1 1/2 x 16	54	2 15/16	(CVN)	1/9
	1	BF13b	PL 1 1/2 x 16	37	6 11/16	(CVN)	1/10
	1	p2	PL 1 x 8	2	9 1/2	(CVN)	1/8
	1	p3	PL 1 x 8	2	9 1/2	(CVN)	1/8
	4	p4	PL 1/2 x 7	2	9 1/2	(CVN)	1/13
	4	p5	PL 1/2 x 7	2	9 1/2	(CVN)	1/13
	2	p7	PL 1/2 x 7	2	9 1/2	(CVN)	1/13
△1	2	p1	PL 1 x 8	2	9 1/2	(CVN)	1/8

RECEIVED
OK'D BY JFL OK'D BY KMH
JUL 22 2009
R. COMM. — APPROVED ✓
BY KMH DATE 7/21/09

REVISIONS			PRINT RECORD		
NO	DATE	DESCRIPTION	DATE	QTY	ISSUED
			7-10	5p	Appr.
△1	7-14-09	ADDED BRG STIFFS @ ABUT. ADDED SECT D. REMOVED WELD ℄ REV TO GRIND TO BEAR IN SECT A			

MEGQUIER & JONES INC.

STRUCTURAL STEEL SINCE 1895

1156 BROADWAY
SOUTH PORTLAND, MAINE 04106

PAINT SSPC-SP10	HOLES U N 15/16ø	WELD U N	Q C REVIEW
PROJECT TH NO.1 OVER THE GIHON RIVER PROJECT NO. BHO 1448 (29) BRIDGE NO. 5 TOWN OF JOHNSON, VERMONT			DATE 6-8-09 / DRAWN BY RLK
DESCRIPTION GIRDER ~ 13G2A			CHK'D BY GDC
ARCH N/A	ENGR VERMONT AGENCY OF TRANSPORTATION		JOB NO J-81
CUSTOMER S.D. IRELAND CONCRETE CONSTRUCTION CORP.			SHT NO 13

998-9

G2A-998

Sheet 13 - Plotted 07/16/2009 @ 09:32 (WSATHER)