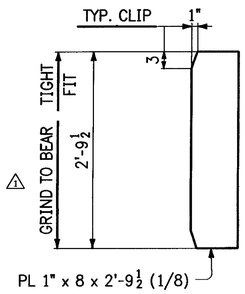

△1 **22 ~ p1**
(PIER)
(ABUT)

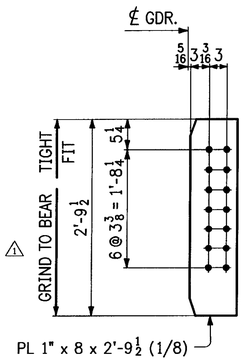

△1 **4 ~ p2**
(PIER)
(LOW)

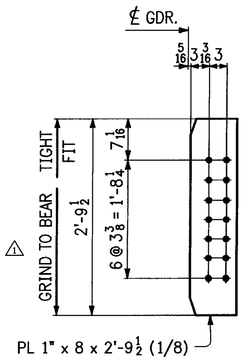

△1 **4 ~ p3**
(PIER)
(HIGH)

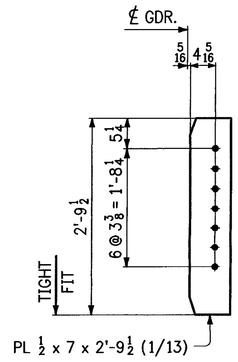

36 ~ p4
(INT.)
(LOW)

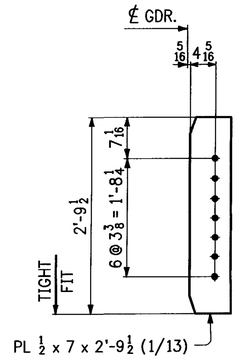

36 ~ p5
(INT.)
(HIGH)

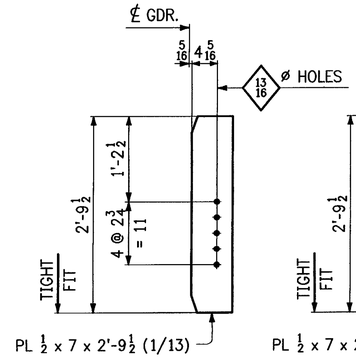

4 ~ p6
(UTILITY CONN.)
(LOW)

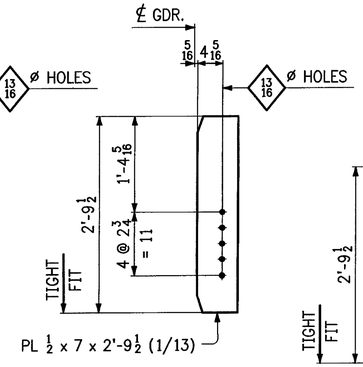

4 ~ p7
(UTILITY CONN.)
(HIGH)

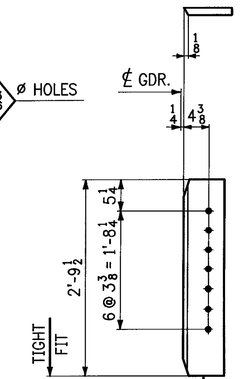

△1 **4 ~ p13**
(INT.)
(LOW)

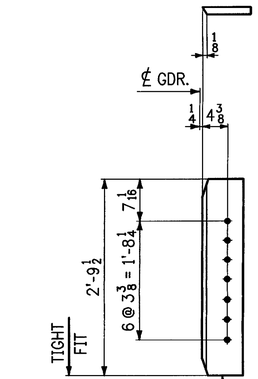

△1 **4 ~ p14**
(INT.)
(HIGH)

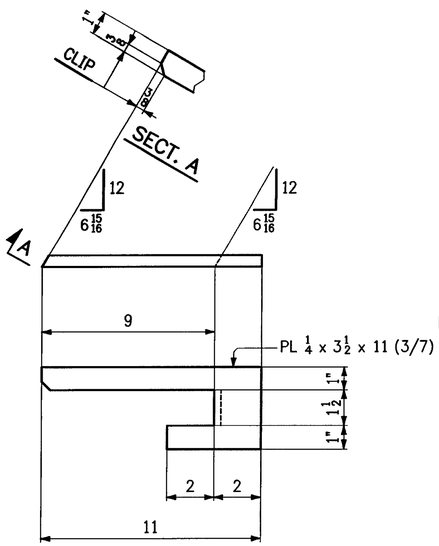

2 ~ DRIP BARS ~ p8
(LINE 1)

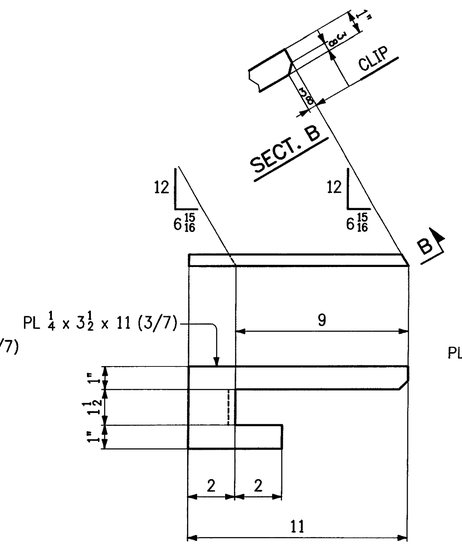

2 ~ DRIP BARS ~ p9
(LINE 5)

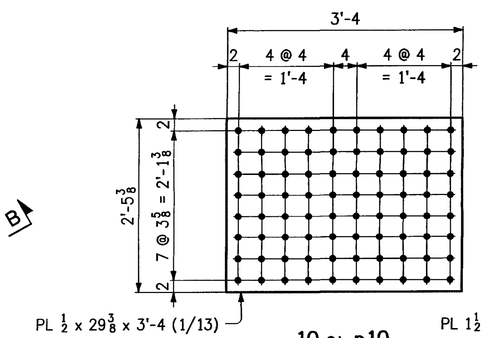

10 ~ p10

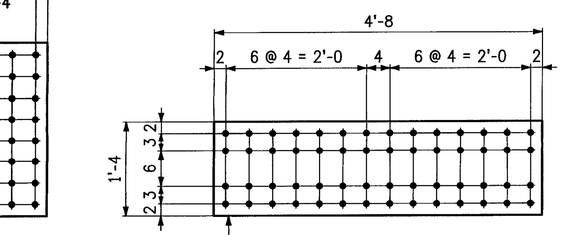

10 ~ p11

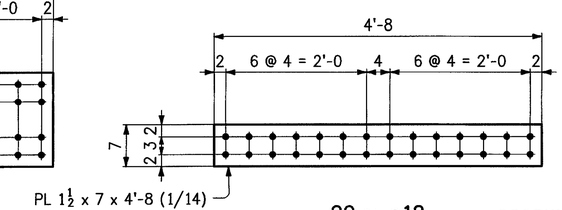

20 ~ p12

RECEIVED
OK'D BY JEL OK'D BY KMH
JUL 23 2009
RECEIVED APPROVED ✓
BY KMH DATE 7/21/09

REVISIONS			PRINT RECORD		
NO	DATE	DESCRIPTION	DATE	QTY	ISSUED
			7-16	5p	Appr.
△1	7-14-09	ADDED CONN. PL'S, REV QUANTITIES & REV. TO "GRIND TO BEAR".			

NOTES:

1. FOR GENERAL NOTES SEE SHT. GN1
2. MATERIAL: M270-50W.

MEGQUIER & JONES INC.

STRUCTURAL STEEL SINCE 1895
1156 BROADWAY
SOUTH PORTLAND, MAINE 04106

PAINT	HOLES U N 15/16ø	WELD U N	Q C REVIEW
PROJECT: TH NO.1 OVER THE GIHON RIVER PROJECT NO. BHO 1448 (29) BRIDGE NO. 5 TOWN OF JOHNSON, VERMONT			DATE 6-8-09 DRAWN BY RLK
DESCRIPTION: GIRDER STANDARDS			CHK'D BY GDC
ARCH N/A	ENGR VERMONT AGENCY OF TRANSPORTATION		JOB NO J-81
CUSTOMER: S.D. IRELAND CONCRETE CONSTRUCTION CORP.			SHT NO 11

998-9 STD998

Sheet 11 - Plotted 07/16/2009 @ 09:31 (HEATHER)