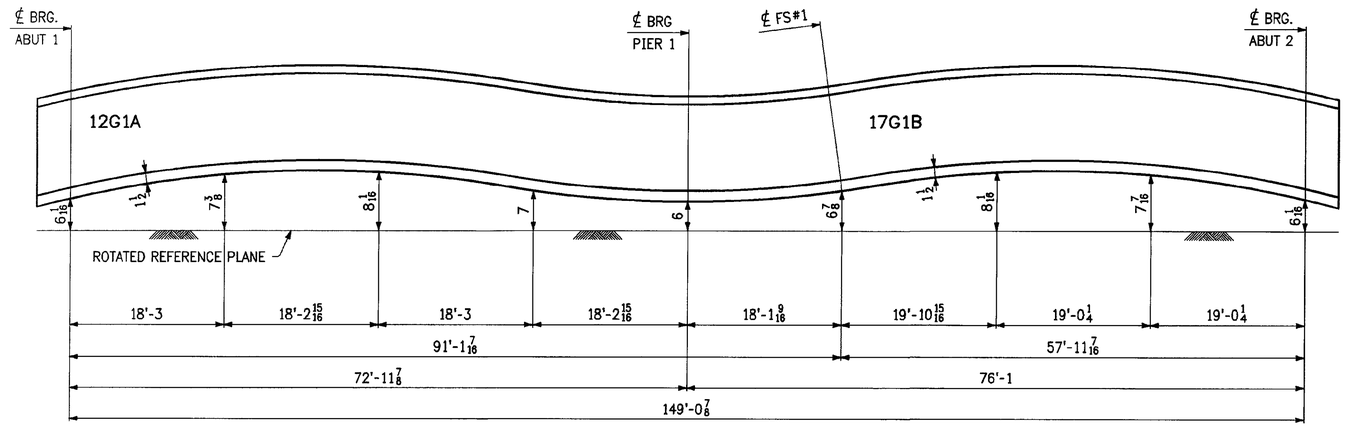

BLOCKING DIAGRAM ~ LINE 1

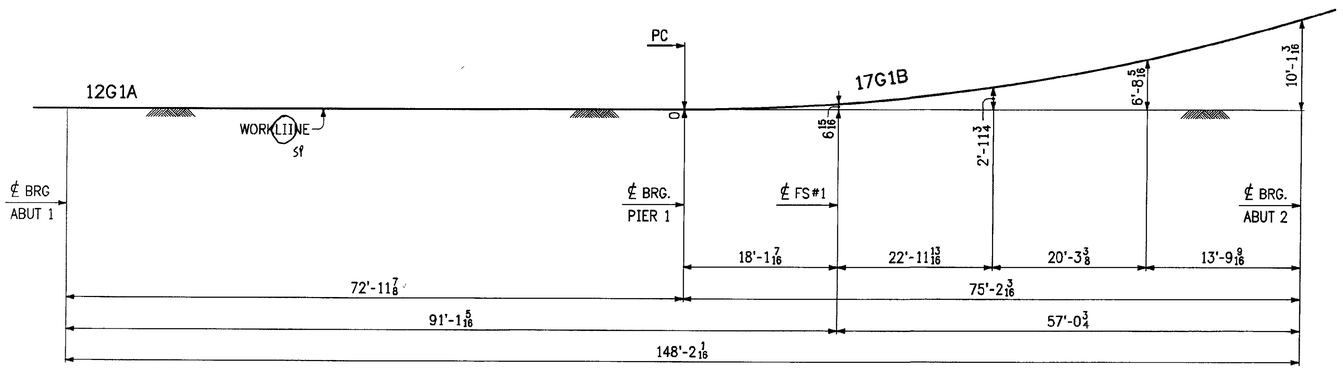

HORIZONTAL SWEEP DIAGRAM ~ LINE 1

Accepted
Accepted as Noted ✓
Accepted Noted Resubmit
Rejected, Revise Resubmit
Rejected - Unacceptable

Checking is only for conformance with the design concept of the Project and compliance with the information given in the Contract Documents The Engineer assumes no liability for errors or omissions that may be contained herein The Contractor, by approving and submitting these documents verifies their accuracy as stipulated on the Contractor's Shop Drawing Stamp

Date 7/7/09 DuBOIS AND KING By

NOTES:

1. LONGITUDINAL DIMS FOR BLOCKING DIAGRAMS ARE ALONG ℄ GDR AT BOTTOM OF BOTTOM FLG.
2. BLOCKING DIMS. ARE GIVEN TO THE BOTTOM OF THE THICKER FLG. AT FIELD SPLICES
3. FIELD SPLICE PLATES SHALL BE MATCH-MARKED AFTER REAMING AND PRIOR TO DISASSEMBLY.
4. FOR GENERAL NOTES, SEE DWG. GN1

RECEIVED
CK'D BY JFL CK'D BY KMH
JUN 1 0 2009
APPROVED ✓
BY KMH DATE 7/13/09

REVISIONS			PRINT RECORD		
NO	DATE	DESCRIPTION	DATE	QTY	ISSUED
			6-15	E	Appr.

MEGQUIER & JONES INC.
STRUCTURAL STEEL SINCE 1895
1156 BROADWAY
SOUTH PORTLAND, MAINE 04106

PAINT	HOLES U N	WELD U N	Q C REVIEW
PROJECT: TH NO.1 OVER THE GIHON RIVER PROJECT NO. BHO 1448 (29) BRIDGE NO. 5 TOWN OF JOHNSON, VERMONT			DATE 6-8-09
			DRAWN BY 5-22-09
DESCRIPTION: BLOCKING DIAGRAMS ~ LINE 1			CHK D BY
ARCH N/A	ENGR VERMONT AGENCY OF TRANSPORTATION		JOB NO J-81
CUSTOMER S.D. IRELAND CONCRETE CONSTRUCTION CORP.			SHT NO BD1

998-5 BLK998A

Sheet 181 Plotted 06/09/2009 @ 13:45 (HAYNES)