MK	QTY	DESCRIPTION	MATERIAL	LENGTH	REMARKS	REV
4A	10	SWEDGED ROD				–
4a1	10	Ø1.500" X 26.000" SWEDGED ROD	A449		14" SWEDGE, 7" THRD, A153-HDG	–
4B	30	HEAVY HEX NUT				–
4b1	30	Ø1.500" HEX NUT	A563-DH OR A194-2H		DRY LUBE, DYE, A153-HDG	–
4C	10	WASHER PLATE				–
4c1	10	0.375" X 3.000"	A36	3.000"	1 7/8"ø HOLE CENTERED; A123-HDG	–
4D	20	SWEDGED ROD				–
4d1	20	Ø1.500" X 22.000" SWEDGED ROD	A449		14" SWEDGE, 4" THRD; A153-HDG	–
4F	20	WASHER PLATE				–
4f1	20	0.375" X 3.000"	A36	7.500"	~~1 7/8"ø~~ HOLE CENTERED, A123-HDG	–
					5/13/2009 2:55:51 PM	

1 7/8" x ~~[illegible]~~ [illegible]

Not true
See Email
6/15

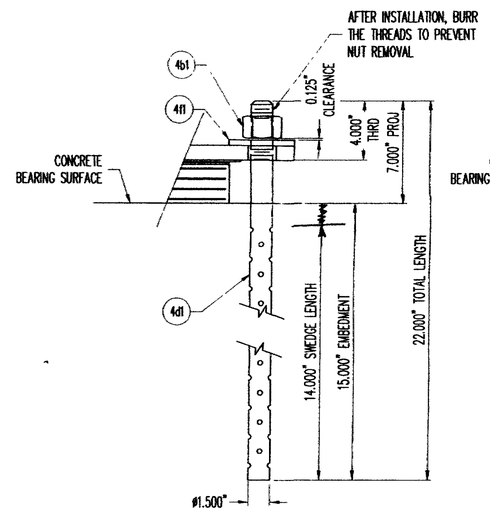

ANCHOR ROD ASSEMBLY

EXPANSION BEARING

(10) REQ'D @ ABUT. 1

(10) REQ'D @ ABUT. 2

(20) REQ'D TOTAL

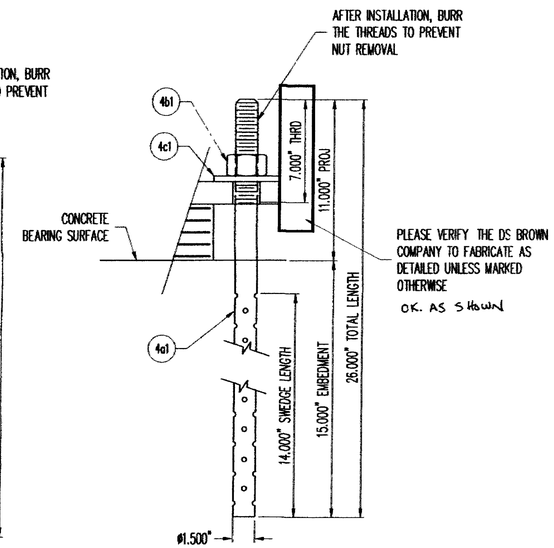

ANCHOR ROD ASSEMBLY

FIXED BEARING

(10) REQ'D @ PIER

VTrans - PDD

MAY 2 2 2009

Structures Design Section

SEE SHEET GN1 FOR GENERAL NOTES

Accepted
Accepted as Noted ✓
Accepted Noted Resubmit
Rejected, Revise Resubmit
Rejected - Unacceptable

Checking is only for conformance with the design concept of the Project and compliance with the information given in the Contract Documents. The Engineer assumes no liability for errors or omissions that may be contained herein. The Contractor by approving and submitting these documents, verifies their accuracy as stipulated on the Contractor's Shop Drawing Stamp.

Date 6/8/09 DuBOIS AND KING By [signature]

KMH 6/12/09

REV	DESCRIPTION	DATE	DET	CKD

D.S. BROWN

THE D.S. BROWN COMPANY
300 E. CHERRY STREET
NORTH BALTIMORE, OHIO 45872
419.257.3561
FAX 419.257.0332
WWW.DSBROWN.COM

LOCATION — TH NO. 1 OVER THE GIHON RIVER
BRIDGE — 5
PROJECT — BHO 1448 (29)
—
P.O. NO. — 6045
DESIGNER — DuBOIS & KING, INC.
CUSTOMER — SD IRELAND CONSTRUCTION

ITEM	QUANTITY
–	–
–	–
–	–
–	–
–	–
–	–
–	–
–	–
–	–
–	–

DESCRIPTION	SCALE	DRAWN BY	CHECKED BY	DATE	
ANCHOR ROD ASSEMBLY LAMOILLE CO., VT	N.T.S.	SP	EK	5/09	–
	PROJECT NUMBER	PRODUCT CODE	RELEASE	SHEET	
	26274	1104	1	4	