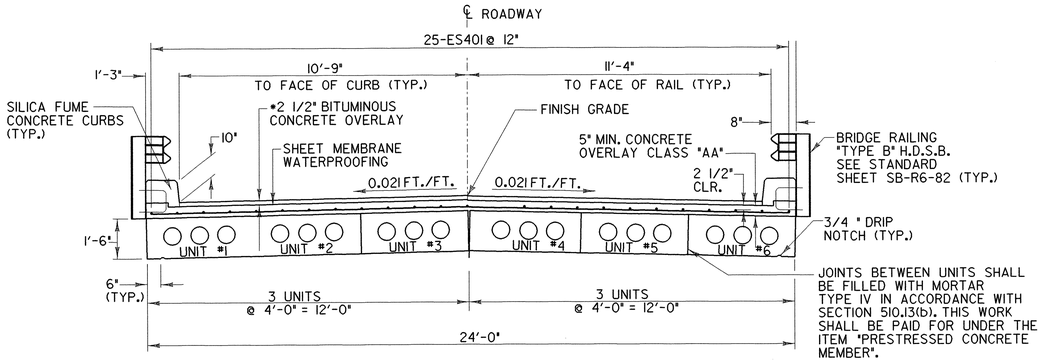

* 1 1/4" LIFT OF TYPE IV OVERLAYED WITH AN 1 1/4" LIFT OF TYPE III BITUMINOUS CONCRETE

TYPICAL SECTION

3/8" = 1'-0"

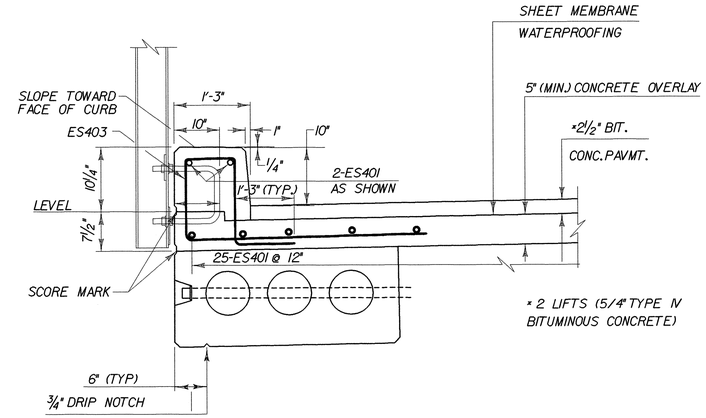

STOP DRIP NOTCHES 5'-0" FROM ENDS OF UNIT AND OUTLET AT 45° TO FASCIA

CURB & RAIL SECTION

UNIT #1 SHOWN. UNIT #6 SAME EXCEPT OPPOSITE HAND STRAND AND REINFORCING STEEL LOCATIONS SAME AS INTERMEDIATE VOIDED SLABS

NTS

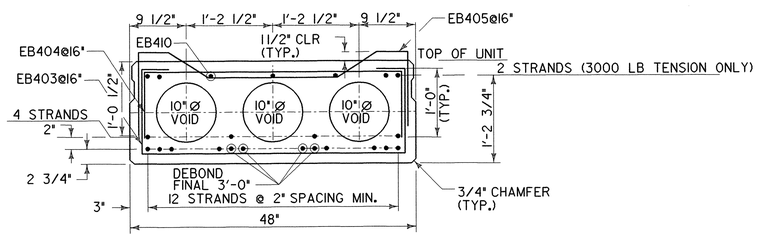

UNITS 1- 6

TYPICAL VOIDED SLAB SECTION

1" = 1'-0"

RE-ADVERTISED

PROJECT NO. BHO 1445 (28)

Greenman-Pedersen CONSULTING ENGINEERS GPI 55 Monument Ave. Bennington, VT. 05201	LINCOLN BRIDGE 13 OVER COTA BROOK BRIDGE TYPICAL SECTION SHEET			
	DRAWING NO. TS-1	SCALE: AS SHOWN	DATE: DEC., 1999	SHEET NO. 6 OF 13

DRAFTED BY

DESIGNED BY

CHECKED BY

IN CHARGE OF

d:\1999\99006\hwy\tsunk