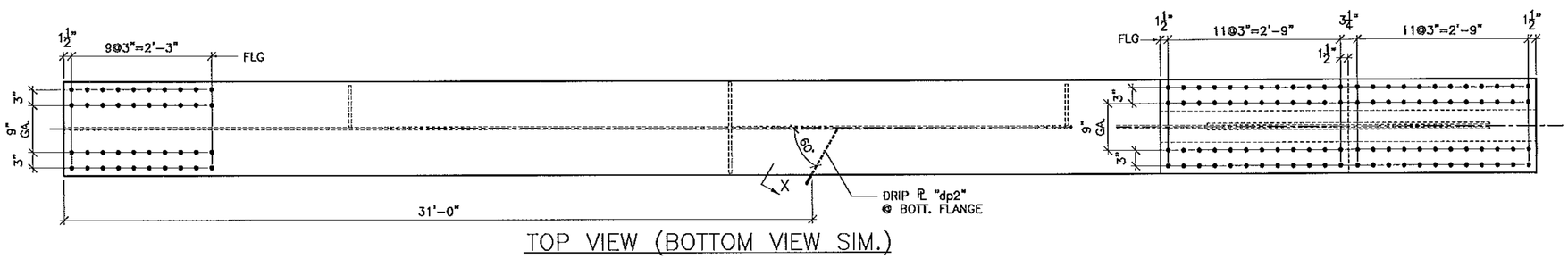

TOP VIEW (BOTTOM VIEW SIM.)

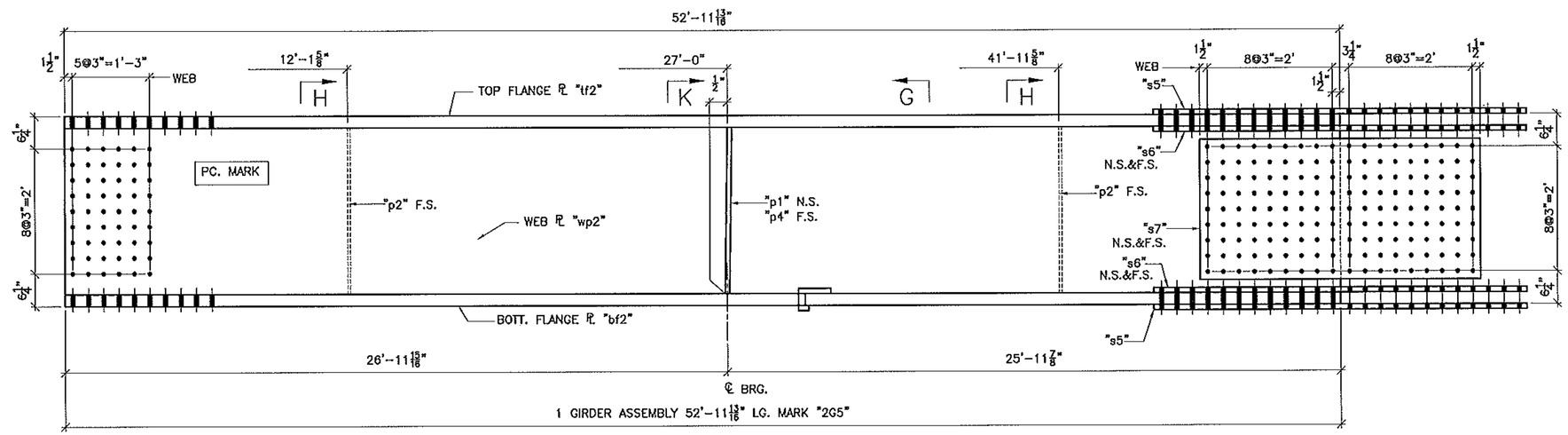

BILL OF MATERIAL

SHIP	SHIP MARK	NO. PCS.	PIECE MARK	DESCRIPTION	LENGTH	REMARKS	WT.
1	2G5			BRIDGE GIRDER			
		1	wp2	PL ½X32	52'-11 13/16		2888
		1	tf2	PL 2¼X18	52'-11 13/16		7305
		1	bf2	PL 2¼X18	52'-11 13/16		7305
		1	p1	SEE SHT. 26			
		2	p2	SEE SHT. 26			
		1	p4	SEE SHT. 26			
		2	S5	SEE SHT. 26			
		4	S6	SEE SHT. 26			
		2	S7	SEE SHT. 26			

GIRDER WT: 19,242

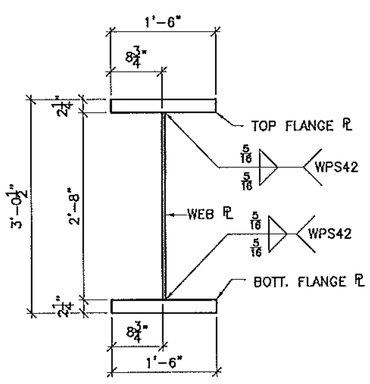

SECTION G
(GIRDER ASS'Y)

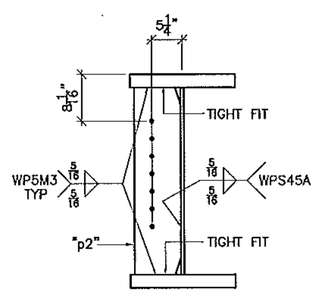

SECTION H

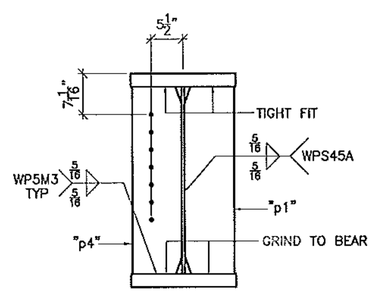

SECTION K

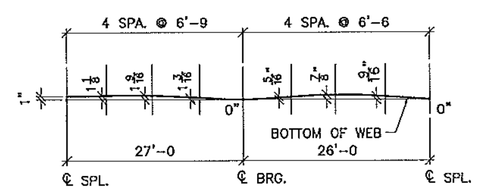

CAMBER DIAGRAM

Vermont Agency of Transportation
RECEIVED
CK'D BY GFR OK'D BY
05/15/2012
RESUBMIT APPROVED X
BY C. CARLSON DATE 05/16/2012

SEE .dxf FILES FOR WEB PL CUTTING
SEE SHEET 26 FOR PIECE DETAILS
SEE SHEET B1 FOR NOTES

FINISH				
MATERIAL AASHTO M270 (ASTM A709) GRADE 50				
HOLES 15/16"ø U.O.N.				
ELECTRODES				
WELDS PER WPS				
SURFACE PREP	1	5/15/12	PER APPROVAL	JAC
	NO	DATE	DESCRIPTION	BY
			REVISIONS	

ARC ENTERPRISES, INC.
ADVANCED RESOURCES & CONST. ENTERPRISES, INCORPORATED
P.O. BOX 120 KINGFIELD, ME. 04947
PHONE: (207) 265-2646 – FAX: (207) 265-4054

DRAFTER JAC	STRINGER DETAILS	CONTRACT NO.	
DATE 4/11/12	VERMONT AGENCY OF TRANSPORTATION, NEWPORT CITY, CO. OF ORLEANS RAILROAD SQUARE, IM11 (CLASS 2) MAJOR COLLECTOR, BRIDGE NO. 8	BRO 1449 (25)	
CHECKED JS		DWG. NO.	
JOB # 12-100	G.C. REED & REED	10	

J.A.C. DRAFTING/5/5/12/010

PDF created with FinePrint pdfFactory trial version http://www.pdffactory.com