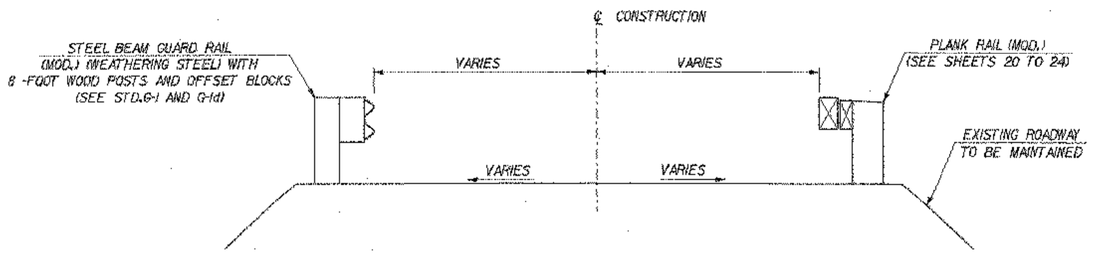

TYPICAL ROADWAY SECTION

SCALE 1/2" = 1'-0"

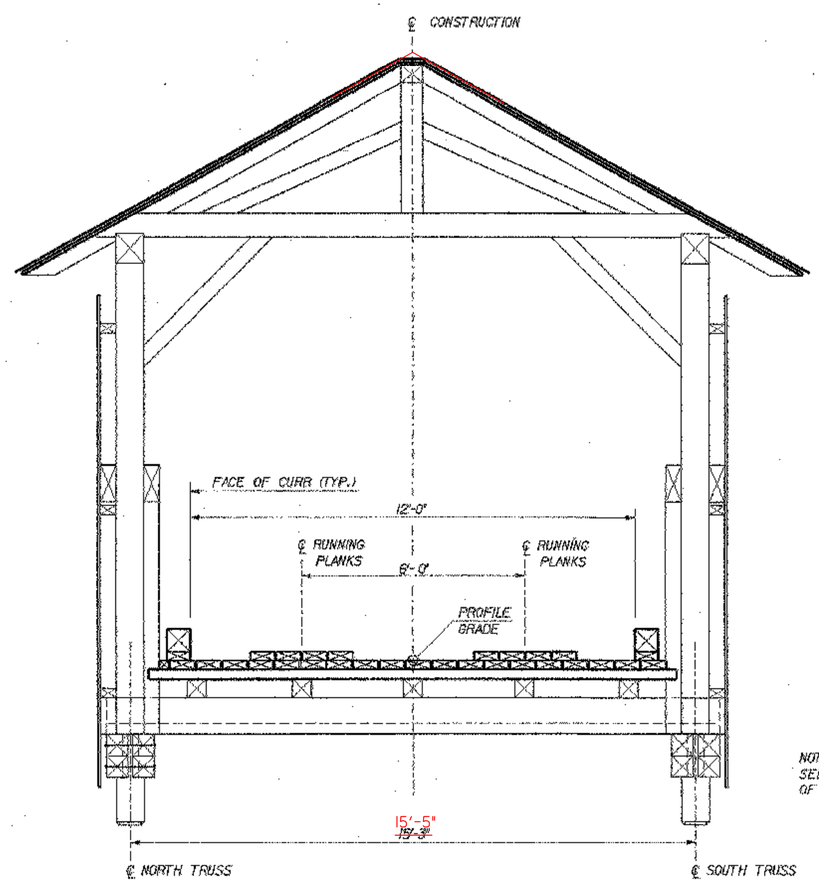

NOTE:
SEE SHEET 12 FOR DESCRIPTION OF NEW WORK TO EXISTING TRUSS.

NEW TYPICAL BRIDGE SECTION

SCALE 1/2" = 1'-0"

FINAL HYDRAULICS REPORT

HYDROLOGIC DATA

DRAINAGE AREA= 19.4 SQUARE MILES
CHARACTER OF TERRAIN: STEEP, MOUNTAINOUS, WOODED
CHARACTER & TYPE OF STREAM: SMALL, SINUOUS, ALLUVIAL FLOOD PLAIN WITH PERENNIAL BUT FLASHY FLOW HABIT
NATURE OF STREAMBED: GRAVEL, COBBLES, SMALL BOULDERS, LEDGE

Q2.33= 1024 C.F.S. Q50= 3304 C.F.S.
Q10= 1976 C.F.S. Q100= 3987 C.F.S.
Q25= 2900 C.F.S. Q500= 6666 C.F.S.

DATE OF FLOOD OF RECORD: 1982, 1927, 1935, 1940, 1973, 1976
WATER SURFACE ELEV.: UNKNOWN ESTIMATED DISCHARGE: UNKNOWN
NATURAL STREAM VELOCITY @ Q 25 7.4 FPS
ICE CONDITIONS: DEBRIS:
DOES THE STREAM REACH MAXIMUM HIGHWATER ELEVATION RAPIDLY? YES
IS ORDINARY RISE RAPID? YES
IS STAGE AFFECTED BY UPSTREAM OR DOWNSTREAM CONDITIONS? NO
IF YES, DESCRIBE:

WATERSHED STORAGE 0.5% HEADWATERS UNIFORM THROUGHOUT WATERSHED X
IMMEDIATELY ABOVE SITE

EXISTING STRUCTURE

STRUCTURE TYPE: TIMBER COVERED BRIDGE (KINGPOST TRUSS) YEAR BUILT: 1872
CLEAR SPAN (NORMAL TO STREAM): 62.6 FT.
VERTICAL CLEARANCE ABOVE STREAMBED: 21.6 FT.
WATERWAY OF FULL OPENING: 1457 SQUARE FEET
DISPOSITION OF STRUCTURE: EXISTING HISTORIC STRUCTURE TO BE REHABILITATED

TYPE OF MATERIAL UNDER SUBSTRUCTURE: LEDGE (PRESUMED)

WATER SURFACE ELEV. @ Q2.33= 520.8 FT. VELOCITY= 4.6 C.F.S.
Q10= 522.5 FT. " 5.8 F.P.S.
Q25= 523.5 FT. " 6.6 F.P.S.
Q50= 524.4 FT. " 7.3 F.P.S.
Q100= 525.3 FT. " 7.9 F.P.S.

LONG TERM STREAM BED CHANGES: NONE

IS THE ROADWAY OVERTOPPED BELOW THE Q100? NO FREQUENCY: > Q500
RELIEF ELEVATION: N/A DISCHARGE OVER ROAD @ Q100: 0 C.F.S.

UPSTREAM STRUCTURE: TOWN: CAMBRIDGE DISTANCE: 1.0 MILES
HIGHWAY NO.: TH 78 STRUCTURE NO.: 00048
STRUCTURE TYPE: 3 SPAN CONCRETE T-BEAM
CLEAR SPAN: 102 FT. CLEAR HEIGHT:
YEAR BUILT: 1986 FULL WATERWAY:

DOWNSTREAM STRUCTURE: TOWN: CAMBRIDGE DISTANCE: 1.0 MILES
HIGHWAY NO.: VT. 15 STRUCTURE NO.: 00022
STRUCTURE TYPE: 2 SPAN - STEEL BEAM
CLEAR SPAN: 2 @ 36 FT. CLEAR HEIGHT:
YEAR BUILT: 1958 FULL WATERWAY:

PROPOSED STRUCTURE

STRUCTURE TYPE: SEE NOTE 2
WATERWAY OF FULL OPENING:
CLEAR SPAN (NORMAL TO STREAM): 62.6 FT.
VERTICAL CLEARANCE ABOVE STREAMBED: 21.6 FT.
WATERWAY OF FULL OPENING: 1438 SQUARE FEET

WATER SURFACE ELEV. @ Q2.33= 520.8 FT. VELOCITY= 4.6 F.P.S.
Q10= 522.5 FT. " = 5.8 F.P.S.
Q25= 523.5 FT. " = 6.6 F.P.S.
Q50= 524.4 FT. " = 7.3 F.P.S.
Q100= 525.3 FT. " = 7.9 F.P.S.

IS THE ROADWAY OVERTOPPED BELOW THE Q100? NO FREQUENCY: N/A
RELIEF ELEVATION: N/A DISCHARGE OVER ROAD @ Q100: NONE

AVERAGE LOW ELEVATION OF SUPERSTRUCTURE: 527.8 FT.
VERTICAL CLEARANCE @ Q 25 = 13.7 FT.

SCOUR: SEE NOTE 3
REQUIRED CHANNEL PROTECTION:

PERMIT INFORMATION

AVERAGE DAILY FLOW: 40 C.F.S.
ORDINARY LOW WATER: 20 C.F.S. DEPTH: 0.2 FT.
ORDINARY HIGH WATER: 440 C.F.S. DEPTH: 1.6 FT.

ADDITIONAL COMMENTS

1. PEAK DISHARGES DEVELOPED BY M-J ARE COMPARABLE TO 1982 FLOOD INSURANCE STUDY CONSIDERING DRAINAGE AREA RELATIONSHIPS.

2. HYDRAULIC CONDITIONS FOR PROPOSED STRUCTURE ARE SIMILAR TO EXISTING STRUCTURE.

3. NO CHANNEL SCOUR WAS OBSERVED BY INSPECTORS (FOUNDATIONS ON BEDROCK).

4. WATER SURFACE ELEVATIONS ARE PROVIDED UPSTREAM OF EXISTING BRIDGE. VELOCITIES ARE PROVIDED AT THE BRIDGE.

TRAFFIC DATA

YEAR	ADT	DHV	% D	% T	ADTT
2002	160	20	59	5	10
2022	210	30	59	5	10

18 kip ESAL for flexible pavement from 2002 to 2022: 150,000
18 kip ESAL for flexible pavement from 2002 to 2042: 85,000
Design speed: 20 MPH

DESIGN CRITERIA:
1. DESIGN LIVE LOAD AASHTO H-15 (POSTED)
2. DESIGN SPAN 84.50 FT.
3. ALLOWABLE LOAD FOR SPREAD FOOTINGS ON SOIL N/A ON LEDGE N/A
4. ALLOWABLE LOAD FOR PILING N/A TYPE N/A ESTIMATED LENGTH N/A
5. STRUCTURAL STEEL AASHTO GRADE N/A
6. REINFORCING STEEL GRADE 60
7. CONCRETE HIGH PERFORMANCE A f'_c = 4000 PSI
CONCRETE HIGH PERFORMANCE B f'_c = 3500 PSI

TRAFFIC MAINTENANCE:
1. IS TRAFFIC TO BE MAINTAINED? NO IF YES, ON EXISTING STRUCTURE NO OR ON TEMPORARY BRIDGE NO
2. TEMPORARY BRIDGE REQUIREMENTS: ONE OR TWO WAY N/A TRAFFIC CONTROL SIGNALS REQUIRED NO
BRIDGE TO BE CLOSED DURING CONSTRUCTION WITH TRAFFIC DETOURED AROUND BRIDGE SITE.

ARE SIDEWALKS REQUIRED? NO IF SO, ON WHAT SIDE? N/A

ASD FACTOR LOAD RATING (TONS)

LOADING LEVELS	TRUCK						
	N	HS	3S2	6 AXLE	3A. STR.	4A. STR.	5A. SEMI
INVENTORY	4.0	—					
POSTED	5.0	—	—		—	—	—
OPERATING	5.7	—	—	—	—	—	

COMMENTS: EXISTING FLOORBEAMS CONTROL LOAD RATING

McFarland-Johnson, Inc.

STATE OF VERMONT
AGENCY OF TRANSPORTATION

Town Of CAMBRIDGE Bridge No. 30
Highway No. TH 31 Log Sta. Surv. Sta.
CANYON ROAD OVER BREWSTER RIVER
PRELIMINARY INFORMATION SHEET
Designed By R. JOY Drawn By S. MERKWAN
Checked By R. JOY Date 05/03 Bridge Design Supervisor M. ZYDEL Date 05/03
PROJECT CAMBRIDGE PROJECT NO. BHO 1448(24)
L.G.C. Info. mN\549105\BRIDGE\6xxtrx1298pf.dgn
Bridge Sheet No. Sheet 2 of 25

PLOTTED 12-NOV-2003

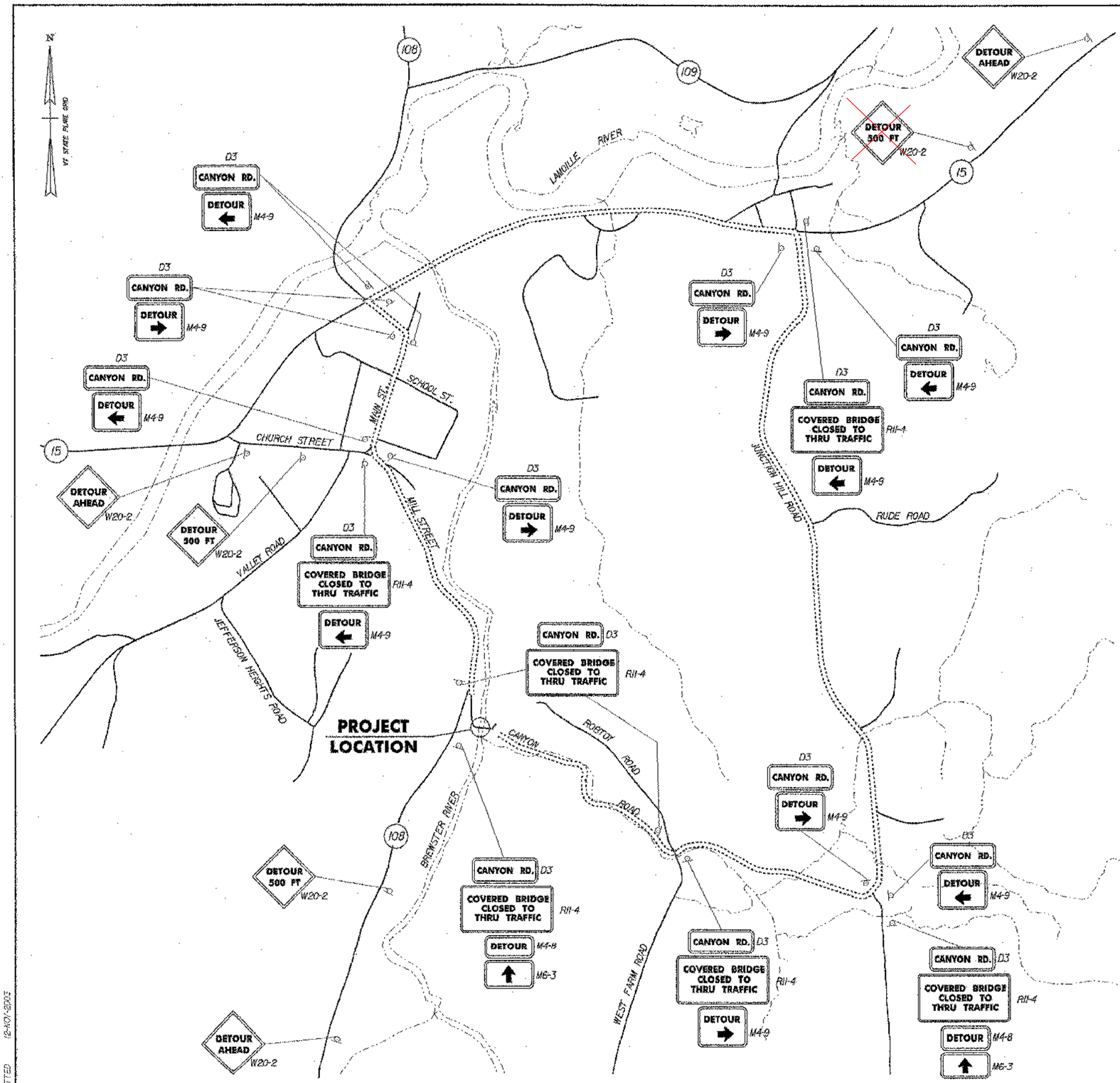

ID NUMBER	SIGN TEXT	SIZE OF SIGN A	SIZE OF SIGN B	SIGN AREA (SQ.FT)	NUMBER REQ'D
D3	CANYON RD.	30"	12"	2.5	16
M4-8	DETOUR	24"	12"	5.00	2
W20-2	DETOUR AHEAD	48"	48"	16.00	3
W20-2	DETOUR 500 FT	48"	48"	16.00	3
M4-9	DETOUR ←	30"	24"	5.00	7
M4-9	DETOUR →	30"	24"	5.00	6
M6-3	↑	21"	15"	2.19	2
R11-4	COVERED BRIDGE CLOSED TO THRU TRAFFIC	60"	30"	12.5	6

TABLE PROVIDED FOR ESTIMATING PURPOSES ONLY.

TRAFFIC CONTROL NOTES

1. THE BRIDGE WILL BE CLOSED TO PEDESTRIAN AND VEHICULAR TRAFFIC DURING CONSTRUCTION. THE CONTRACTOR SHALL NOTIFY THE TOWN OF CAMBRIDGE AT LEAST 2 WEEKS PRIOR TO THE CLOSING OF THE BRIDGE TO THROUGH TRAFFIC. CONTACT RICK LAFOUNTAIN AT 802-644-8843.
2. IN ADDITION TO THE TEMPORARY DETOUR SIGNS DETAILED ON THIS SHEET, THE CONTRACTOR SHALL LAY OUT, ERECT AND MAINTAIN (AND REMOVE AND/OR RESET AS REQUIRED) ADDITIONAL ON-PROJECT TEMPORARY TRAFFIC CONTROL ZONE DEVICES, INCLUDING BUT NOT LIMITED TO, CONSTRUCTION SIGNS, SIGN SUPPORTS, BARRICADES, CONCRETE TRAFFIC BARRIERS AND OTHER DEVICES USED TO REGULATE, WARN AND GUIDE TRAFFIC DURING CONSTRUCTION. TRAFFIC CONTROL DEVICE LAYOUT SHALL CONSIDER THE REQUIREMENTS OF THE MANUAL OF UNIFORM TRAFFIC CONTROL DEVICES (MUTCD) AND PERTINENT E-SERIES STANDARDS, AND SHALL BE SUBMITTED TO THE RESIDENT ENGINEER FOR APPROVAL.
3. TYPE III CONSTRUCTION BARRICADES AND PRECAST CONCRETE BARRIERS SHALL BE PLACED ON THE CANYON ROAD APPROACHES TO LIMITS APPROVED BY THE RESIDENT ENGINEER TO PREVENT TRAFFIC FROM ENTERING THE BRIDGE WORK AREA.
4. THE COST OF ALL TEMPORARY DETOUR SIGNS AND ASSOCIATED SIGN POSTS DETAILED ON THIS SHEET SHALL BE INCLUDED IN ITEM 675.20, TRAFFIC SIGNS, TYPE A (MOD.), AND ITEM 675.30, FLANGED CHANNEL SIGN POST (MOD.), RESPECTIVELY.
5. THE COST OF ALL ON-PROJECT TEMPORARY TRAFFIC CONTROL ZONE DEVICES (EXCEPT "TEMPORARY TRAFFIC BARRIERS") SHALL BE INCLUDED IN ITEM 641.10, TRAFFIC CONTROL.
6. ALL SIGNS SHALL BE FLUORESCENT ORANGE REFLECTIVE SHEETING, WITH BLACK LETTERING AND BLACK BORDERS UNLESS OTHERWISE NOTED.
7. ALL "COVERED BRIDGE CLOSED TO THRU TRAFFIC" (R 11-4) SIGNS SHALL BE WHITE REFLECTIVE SHEETING, WITH BLACK LETTERING AND BLACK BORDERS.
8. REFLECTIVE SHEETING SHALL CONFORM TO ASTM D4956, TYPE VII OR TYPE VIII.
9. NO CONSTRUCTION SIGNS SHALL BE INSTALLED SO AS TO INTERFERE WITH OR OBSTRUCT THE VIEW OF EXISTING TRAFFIC CONTROL DEVICES.
10. THE COST OF PRECAST CONCRETE BARRIERS SHALL BE INCLUDED IN ITEM 621.90, TEMPORARY TRAFFIC BARRIER.

TEMPORARY DETOUR SIGNING PLAN

SCALE 1" = 125'

125 0 125

McFarland-Johnson, Inc.

STATE OF VERMONT
AGENCY OF TRANSPORTATION

Town Of CAMBRIDGE	Bridge No. 30
Highway No. TH 31	Log Sta. / Surv. Sta.
CANYON ROAD OVER BREWSTER RIVER	
TRAFFIC CONTROL SHEET	
Designed By R.JOY	Drawn By S.MERKWAN
Checked By R.JOY Date 05/03	Bridge Design Supervisor M.ZYDEL Date 05/03
PROJECT CAMBRIDGE	PROJECT NO. BHO 1448(24)
L.C.C. Info. mN:\54\105\BRIDGE\Reconf\z12901tp.dgn	
Bridge Sheet No.	Sheet 8 of 25

PLOTTED 12-NOV-2003

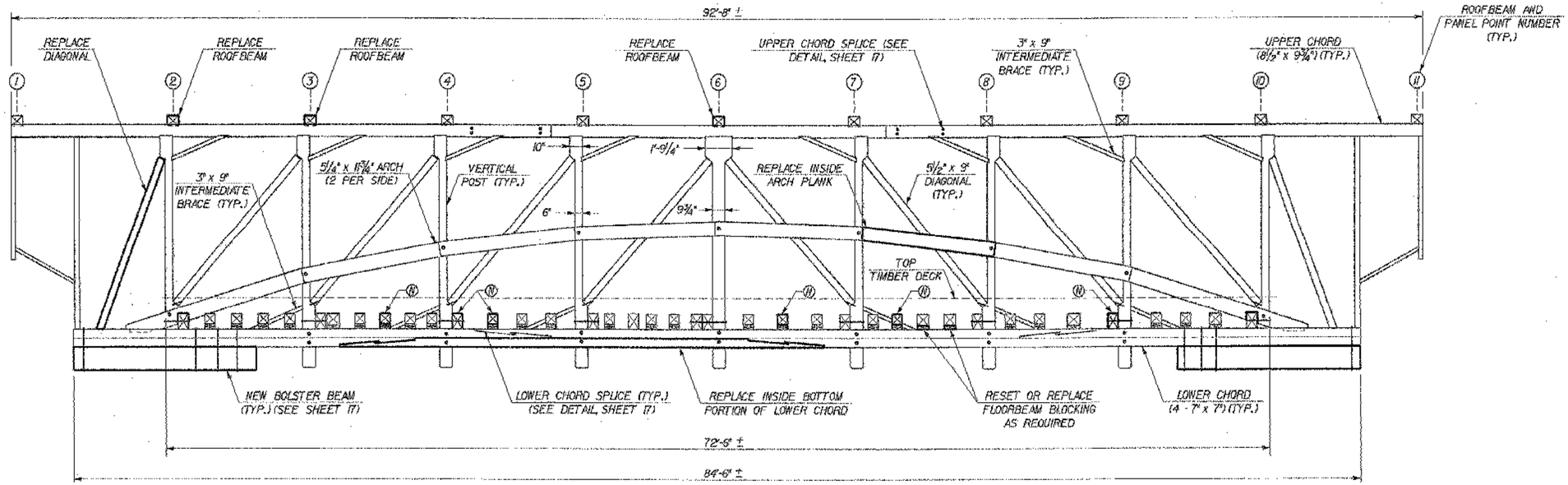

NOTE:
SIDING, DECK AND ROOF NOT SHOWN FOR CLARITY.

INTERIOR NORTH TRUSS ELEVATION - REHABILITATED

(LOOKING NORTH)
SCALE: 1/4" = 1'-0"

(N) DENOTES NEW FLOORBEAM

SIDING NAILERS REPLACED ON BOTH TRUSSES

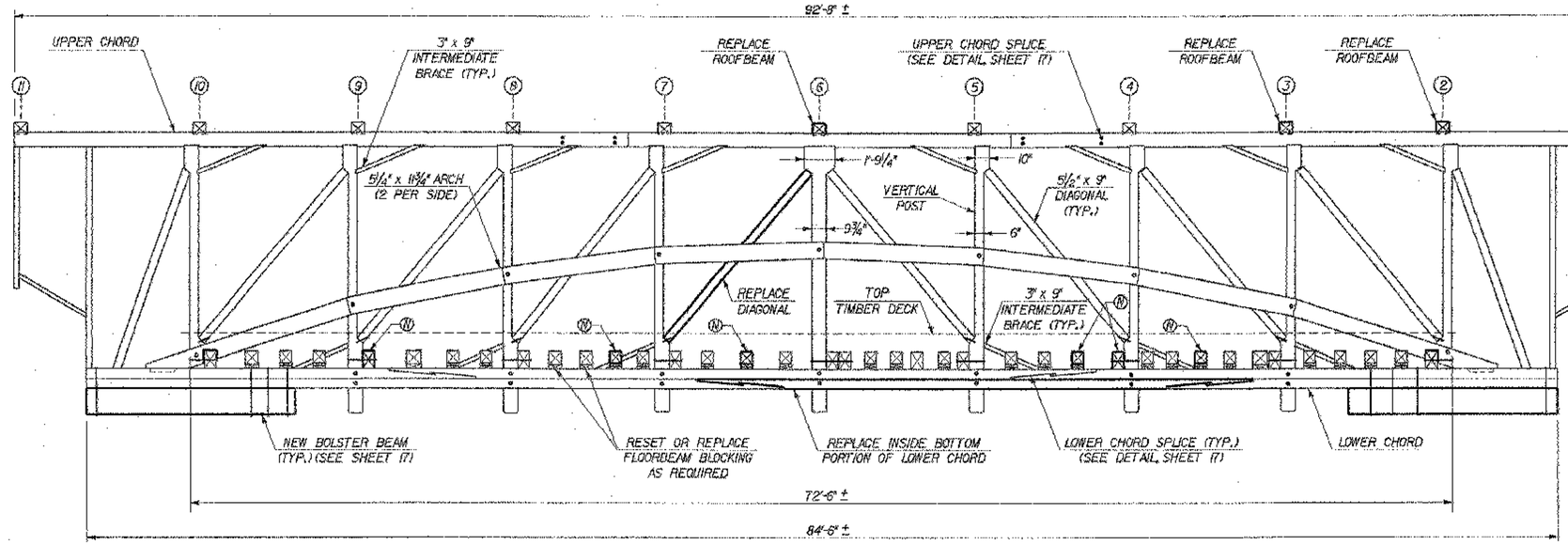

NOTE:
SIDING, DECK AND ROOF NOT SHOWN FOR CLARITY.

INTERIOR SOUTH TRUSS ELEVATION - REHABILITATED

(LOOKING SOUTH)
SCALE: 1/4" = 1'-0"

(N) DENOTES NEW FLOORBEAM

NOTE:
WHEN REPLACING FLOORBEAMS OR RESETTING FLOORBEAMS TO ADJUST THEIR SPACING AS PER SHEET 15 ALSO REPLACE THE FLOORBEAM BLOCKING. REPLACE OTHER FLOORBEAM BLOCKING AS REQUIRED. FLOORBEAM BLOCKING TO BE PAID AS ITEM 522.25, STRUCTURAL LUMBER & TIMBER - TREATED (FLOOR SYSTEM).

NOTE

DETAILS AND DIMENSIONS SHOWN ON THIS SHEET ARE APPROXIMATE AND FOR INFORMATIONAL PURPOSES. THE CONTRACTOR SHALL BE RESPONSIBLE FOR MAKING FIELD MEASUREMENTS OF ALL EXISTING COMPONENTS TO ASSURE CONSISTENCY WITH PROPOSED MODIFICATIONS. FINAL TIMBER REMOVAL AND REPLACEMENT DETAILS SHALL BE PREPARED BY THE CONTRACTOR AND APPROVED BY THE RESIDENT ENGINEER PRIOR TO ADVANCING THE WORK

McFarland-Johnson, Inc.

STATE OF VERMONT
AGENCY OF TRANSPORTATION

Town Of CAMBRIDGE	Bridge No. 30
Highway No. TH 31	Log Sta. / Surv. Sta.
CANYON ROAD OVER BREWSTER RIVER	
TRUSS ELEVATIONS	
Designed By B. COLBURN	Drawn By S. MERKWAN
Checked By R. JOY Date 05/03	Bridge Design Supervisor M. ZYDEL Date 05/03
PROJECT CAMBRIDGE	PROJECT NO. BHO 1448(24)
L.G.C. Info. mN549105\BRIDGE\6cont\z1296tel.dgn	
Bridge Sheet No.	Sheet 13 of 26

PLOTTED 12-NOV-2003

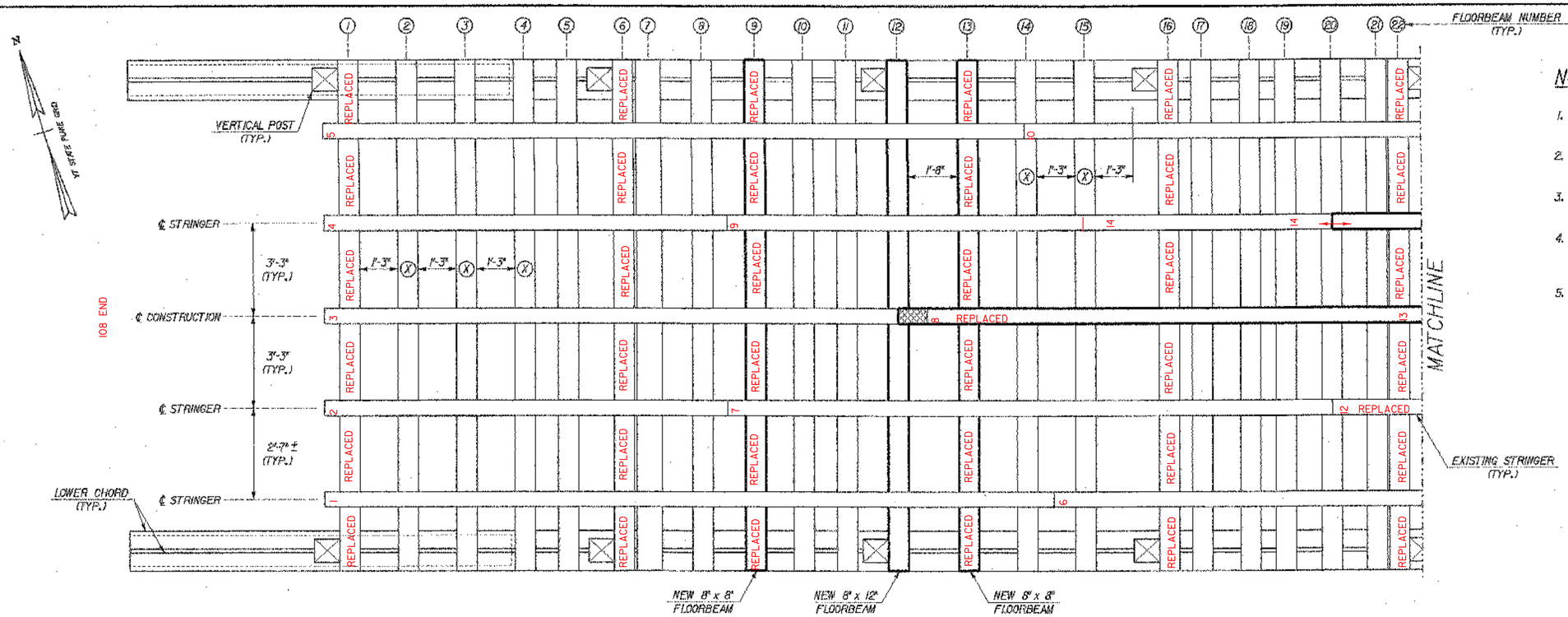

NOTES

1. THE LENGTHS AND LOCATIONS OF STRINGERS COULD NOT BE DETERMINED IN THE FIELD AND HAVE BEEN ESTIMATED FOR PURPOSES OF COST.
2. FOR ESTIMATE OF STRINGER AND FLOORBEAM ELEMENTS TO BE REPLACED, SEE ESTIMATED TIMBER QUANTITIES ON SHEET 3.
3. ADJUSTING SPACING OF EXISTING STRINGERS AND FLOORBEAMS SHALL BE INCIDENTAL TO ITEM 522.25, STRUCTURAL LUMBER & TIMBER - TREATED (FLOOR SYSTEM).
4. EXISTING STRINGERS SHALL BE CUT TO SPAN FROM CENTER TO CENTER OF FLOORBEAMS. COST INCIDENTAL TO NEW STRINGERS ITEM 522.25, STRUCTURAL LUMBER & TIMBER - TREATED (FLOOR SYSTEM).
5. ANY REMOVAL AND/OR REPLACEMENT OF FLOORBEAMS OR STRINGERS SOLELY FOR THE CONTRACTOR'S CONVENIENCE WILL NOT BE PAID FOR.

STRINGERS REPLACED

#1 SAVE 14', CUT ABOUT 11' OFF
8 REPLACE ENTIRELY
#11 CUT 1' OFF END
#14 REPLACE ENTIRELY
#25 END ROTTEN
#15 QUESTIONABLE

FOR CALCULATION USE 5@23' EA.

(X) EXISTING FLOORBEAM LOCATION TO BE ADJUSTED TO THE DIMENSIONS SHOWN

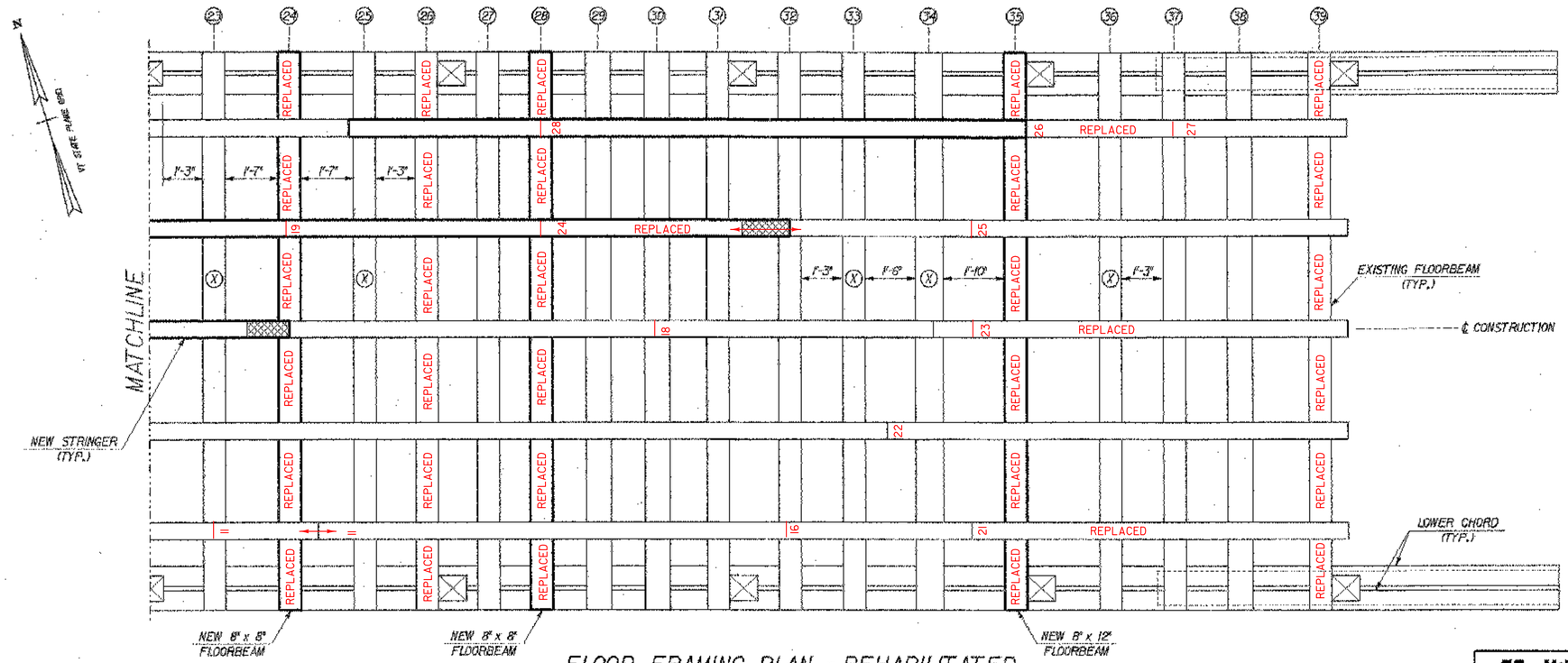

FLOOR FRAMING PLAN - REHABILITATED

SCALE: 1/2" = 1'-0"

LEGEND

TO BE REMOVED FROM THE EXISTING STRINGER THAT IS TO REMAIN IN PLACE (SEE NOTE 4.)

NOTE

DETAILS AND DIMENSIONS SHOWN ON THIS SHEET ARE APPROXIMATE AND FOR INFORMATIONAL PURPOSES. THE CONTRACTOR SHALL BE RESPONSIBLE FOR MAKING FIELD MEASUREMENTS OF ALL EXISTING COMPONENTS TO ASSURE CONSISTENCY WITH PROPOSED MODIFICATIONS. FINAL TIMBER REMOVAL AND REPLACEMENT DETAILS SHALL BE PREPARED BY THE CONTRACTOR AND APPROVED BY THE RESIDENT ENGINEER PRIOR TO ADVANCING THE WORK

STATE OF VERMONT
AGENCY OF TRANSPORTATION

Town Of CAMBRIDGE	Bridge No. 30
Highway No. TH 31	Log Sta. / Surv. Sta.
CANYON ROAD OVER BREWSTER RIVER	
FLOOR FRAMING PLAN (2 OF 2)	
Designed By B. COLBURN	Drawn By S. MERKWAN
Checked By R.JOY Date 05/03	Bridge Design Supervisor M.ZYDEL Date 05/03
PROJECT CAMBRIDGE	PROJECT NO. BHO 1448(24)
I.G.C. Info. mN:\549105\BRIDGE\Geom\z12961p2.dgn	
Bridge Sheet No.	Sheet 15 of 26

McFarland-Johnson, Inc.

PLOTTED 12-10-2003

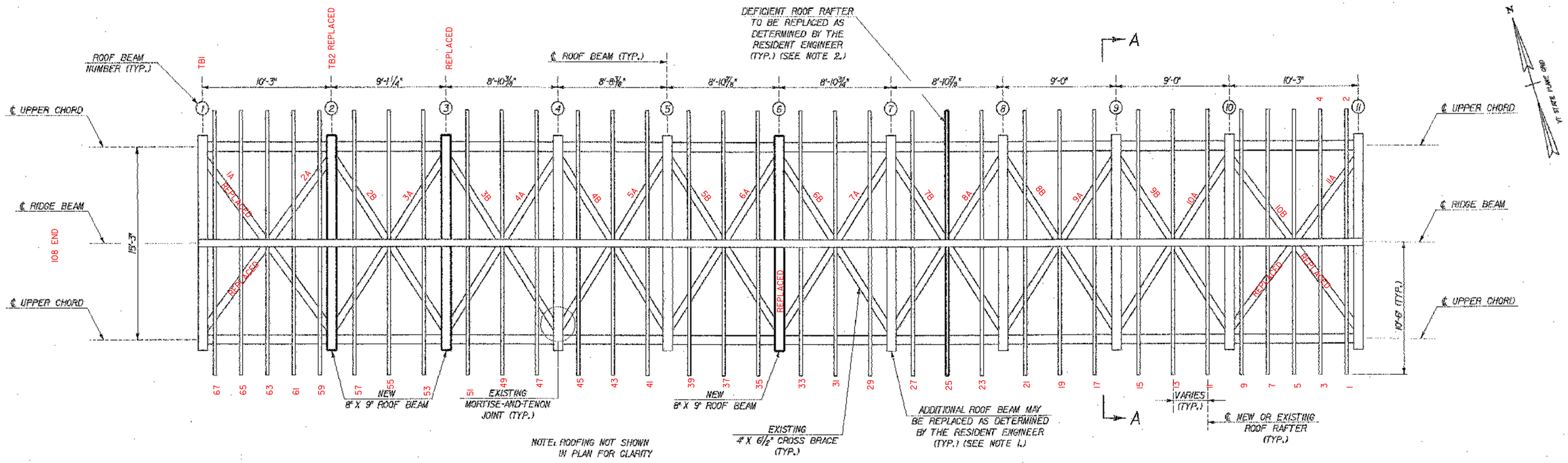

ROOF FRAMING PLAN

SCALE: 1/4" = 1'-0"

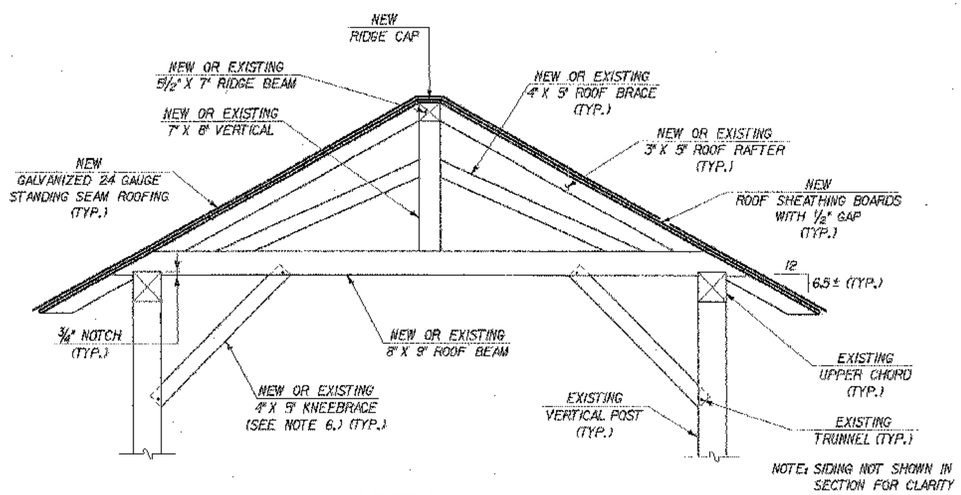

SECTION A-A

SCALE: 1/2" = 1'-0"

NOTES

1. REPLACE ROOF BEAMS AT LOCATIONS 2, 3 AND 6. ANY ADDITIONAL ROOF BEAMS THAT ARE FOUND TO BE IN A CONDITION THAT WARRANTS REPLACEMENT SHALL BE BROUGHT TO THE ATTENTION OF THE RESIDENT ENGINEER FOR ASSESSMENT AND APPROVAL. FOR ESTIMATING PURPOSES, 2 ADDITIONAL NEW ROOF BEAMS HAVE BEEN INCLUDED IN ITEM 522.20, STRUCTURAL LUMBER & TIMBER - UNTREATED.
2. INDIVIDUAL ROOF RAFTERS SHALL BE RETAINED WHERE THESE ARE IN GOOD CONDITION WITH TIGHT JOINTS. DEFICIENT ROOF RAFTERS SHALL BE REPLACED AS ORDERED BY THE RESIDENT ENGINEER. FOR ESTIMATING PURPOSES, 20 NEW ROOF RAFTERS HAVE BEEN INCLUDED IN ITEM 522.20, STRUCTURAL LUMBER & TIMBER - UNTREATED.
3. STRUCTURAL ROOF SYSTEM MEMBERS SHALL BE FULL SAWN SPRUCE, NO. 1 GRADE, AND PAID UNDER ITEM 522.20, STRUCTURAL LUMBER & TIMBER - UNTREATED.
4. THE ROOF SHEATHING SHALL BE FULL SAWN SPRUCE, NO. 1 GRADE, OR HEMLOCK, NO. 1 GRADE, AND PAID UNDER ITEM 522.30, NON-STRUCTURAL LUMBER - UNTREATED. (SIDING & ROOF). MINIMUM LENGTH SHALL BE 16 FEET.
5. ALL NEW TIMBER CONNECTIONS IN THE ROOF SYSTEM, INCLUDING NOTCHES, MORTISE-AND-TENON JOINTS, AND OTHER CONNECTIONS, SHALL MATCH THE EXISTING JOINTING CONFIGURATION AND TYPE AND SHALL BE CUT TO PROVIDE A TIGHT JOINT. ANY DEVIATION FROM THE EXISTING JOINTING TECHNIQUES SHALL BE APPROVED BY THE RESIDENT ENGINEER.
6. KNEEBRACES SHALL BE RETAINED WHERE THESE ARE IN GOOD CONDITION WITH TIGHT JOINTS. DEFICIENT KNEEBRACES SHALL BE REPLACED AS ORDERED BY THE RESIDENT ENGINEER. FOR ESTIMATING PURPOSES, 8 NEW KNEEBRACES HAVE BEEN INCLUDED IN ITEM 522.20, STRUCTURAL LUMBER & TIMBER - UNTREATED.

NOTE

DETAILS AND DIMENSIONS SHOWN ON THIS SHEET ARE APPROXIMATE AND FOR INFORMATIONAL PURPOSES. THE CONTRACTOR SHALL BE RESPONSIBLE FOR MAKING FIELD MEASUREMENTS OF ALL EXISTING COMPONENTS TO ASSURE CONSISTENCY WITH PROPOSED MODIFICATIONS. FINAL TIMBER REMOVAL AND REPLACEMENT DETAILS SHALL BE PREPARED BY THE CONTRACTOR AND APPROVED BY THE RESIDENT ENGINEER PRIOR TO ADVANCING THE WORK.

PLOTTED 12-NOV-2003

McFarland-Johnson, Inc.

STATE OF VERMONT
AGENCY OF TRANSPORTATION

Town Of CAMBRIDGE	Bridge No. 30
Highway No. TH 31	Log Sta. / Surv. Sta.
CANYON ROAD OVER BREWSTER RIVER	
ROOF FRAMING PLAN AND DETAILS	
Designed By B. COLBURN	Drawn By S. MERKWAN
Checked By R. JOY Date 05/03	Bridge Design Supervisor M. ZYDEL Date 05/03
PROJECT CAMBRIDGE	PROJECT NO. BHO 1448(24)
I.G.C. Info. mN154905\BRIDGE\Bconf\z1296fp3.dgn	
Bridge Sheet No.	Sheet 16 of 26

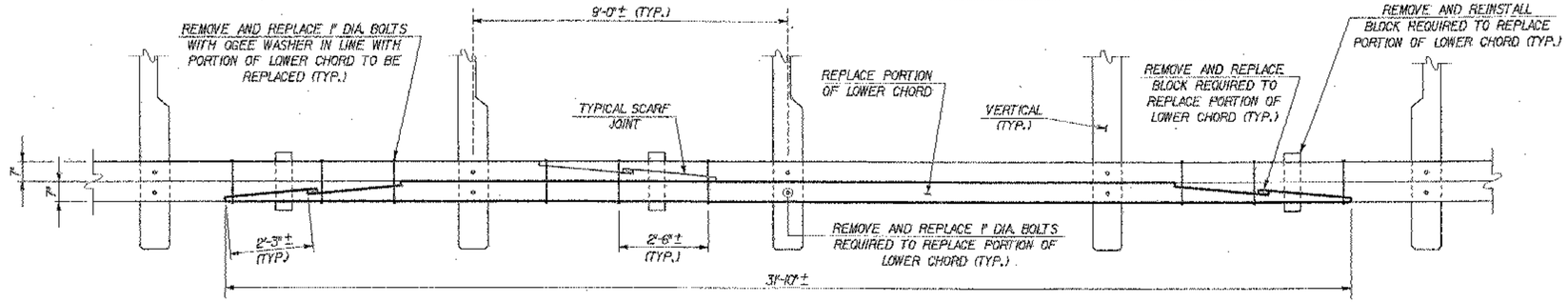

LOWER CHORD SPLICE DETAIL - ELEVATION

SCALE: 1/2" = 1'-0"

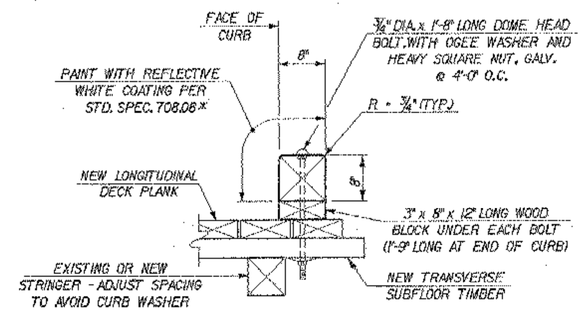

* COST INCIDENTAL TO ITEM 513.30

CURB DETAIL

N.T.S.

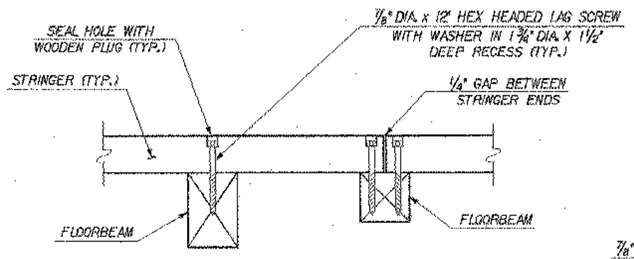

TYPICAL STRINGER TO FLOORBEAM CONNECTION

SCALE: 1" = 1'-0"

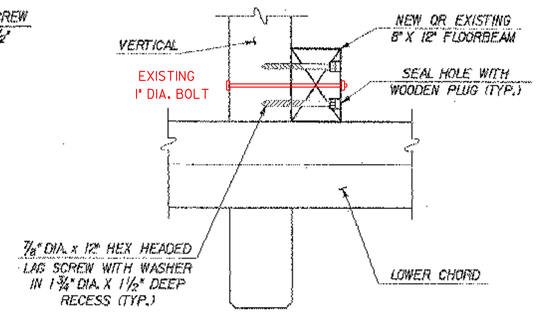

TYPICAL FLOORBEAM TO VERTICAL CONNECTION

SCALE: 1" = 1'-0"

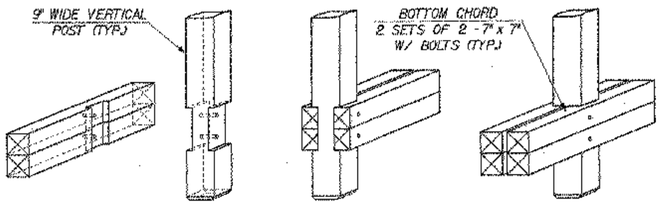

LOWER CHORD DETAIL - ISOMETRIC

SCALE: 1/2" = 1'-0"

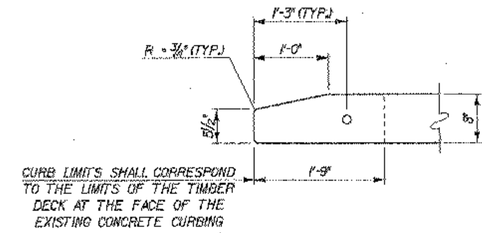

CURB END DETAIL - PLAN

N.T.S.

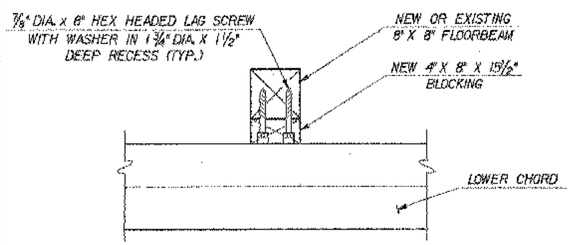

TYPICAL FLOORBEAM TO BLOCKING CONNECTION

SCALE: 1" = 1'-0"

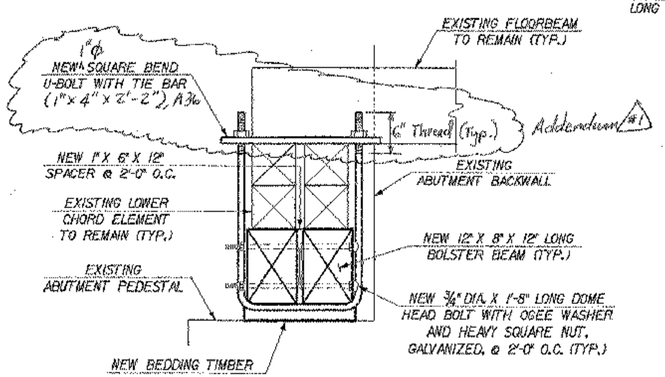

SECTION A-A

SCALE: 1" = 1'-0"

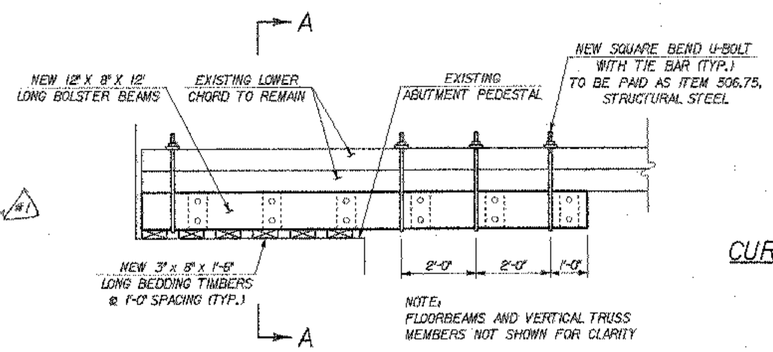

BOLSTER BEAM DETAIL - ELEVATION

SCALE: 1/2" = 1'-0"

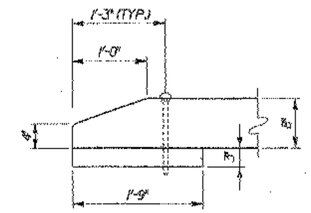

CURB END DETAIL - ELEVATION

N.T.S.

RUNNING PLANK END DETAIL

N.T.S.

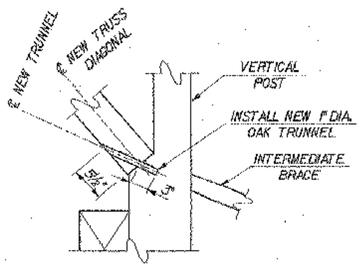

TRUNNEL DETAIL *

SCALE: 1" = 1'-0"

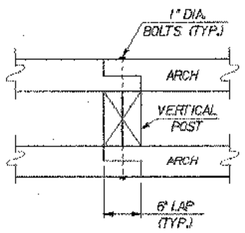

ARCH JOINT AT VERTICAL POST - PLAN

SCALE: 1" = 1'-0"

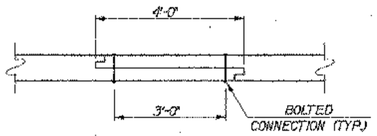

UPPER CHORD SPLICE DETAIL - PLAN

SCALE: 1/2" = 1'-0"

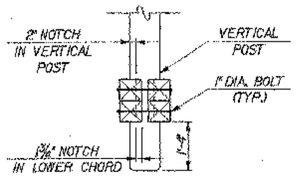

LOWER CHORD - VERTICAL POST CONNECTION DETAIL

SCALE: 1/2" = 1'-0"

NOTES

DETAILS AND DIMENSIONS SHOWN ON THIS SHEET ARE APPROXIMATE AND FOR INFORMATIONAL PURPOSES. THE CONTRACTOR SHALL BE RESPONSIBLE FOR MAKING FIELD MEASUREMENTS OF ALL EXISTING COMPONENTS TO ASSURE CONSISTENCY WITH PROPOSED MODIFICATIONS. FINAL TIMBER REMOVAL AND REPLACEMENT DETAILS SHALL BE PREPARED BY THE CONTRACTOR AND APPROVED BY THE RESIDENT ENGINEER PRIOR TO ADVANCING THE WORK.

* ALL DIAGONALS WHICH ARE TO REMAIN IN PLACE SHALL ALSO BE PINNED TO THE EXISTING VERTICALS USING THIS DETAIL. THIS WORK SHALL BE PAID AS ITEM 529.20, PARTIAL REMOVAL OF STRUCTURE (MOD.)

McFarland-Johnson, Inc.

STATE OF VERMONT
AGENCY OF TRANSPORTATION

Town Of	CAMBRIDGE	Bridge No.	30
Highway No.	TH 31	Log Sta. / Surv. Sta.	
CANYON ROAD OVER BREWSTER RIVER			
MISCELLANEOUS DETAILS			
Designed By B. COLBURN		Drawn By S. MERKWAN	
Checked By R. JOY	Date 05/03	Bridge Design Supervisor M. ZYDEL	Date 05/03
PROJECT CAMBRIDGE		PROJECT NO. BHO 1448(24)	
I.G.C. Info. m:\549105\BRIDGE\Geom\z1296mdt.dgn			
Bridge Sheet No.		Sheet 17 of 26	

PLOTTED 12-NOV-2003