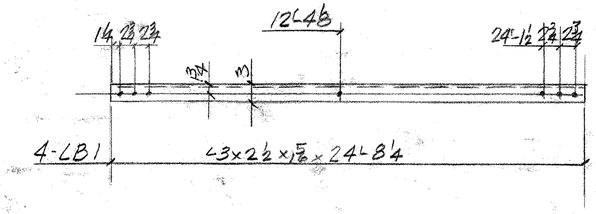

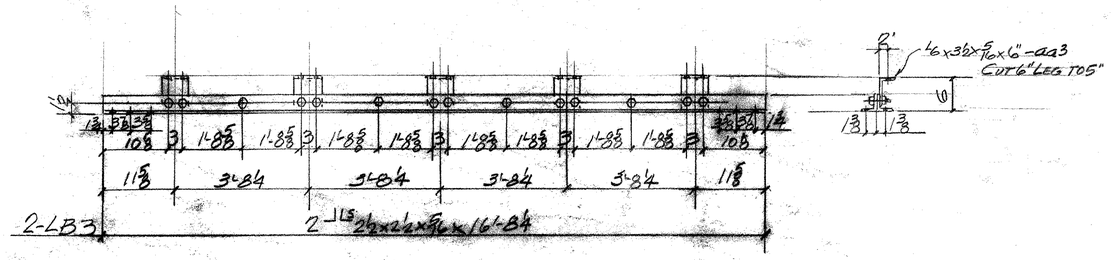

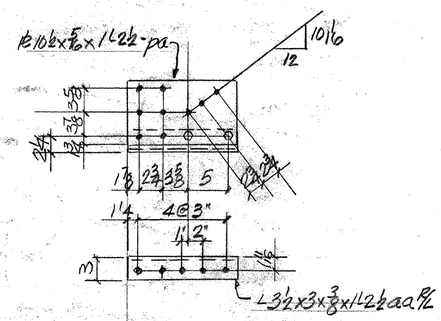

M2R - 2 REQ'D - AS SHOWN

M2L - 2 REQ'D. - OPP. HAND

(BOLT aa' NEAR SIDE OF PL.)

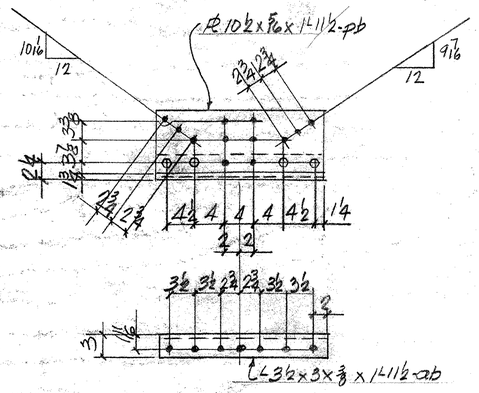

M3R - ONE REQ'D - AS SHOWN

M3L - ONE REQ'D - OPP. HAND (BOLT ab - NEAR SIDE OF PL.)

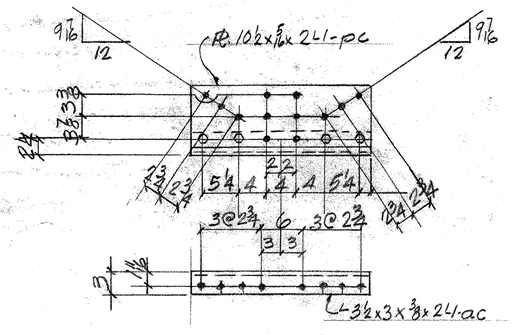

M4 - 4 REQ'D

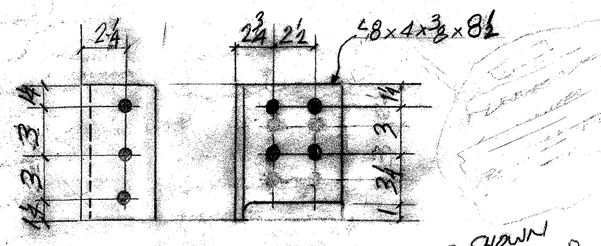

K1 - (80 REQ'D.) - 40 AS SHOWN, 40 OPPOSITE HAND

@ SALVAGED STEINGERS

RECEIVED
CK'D BY ____ OK'D BY RSY
JUN 04 2007
RESUBMIT ____ APPROVED ✓
BY OPW DATE 6/6/07

ABM INFO PAGE	LINE	NO.	DESCRIPTION	FT	IN	ASSEM. MARK	SHIPPING MARK	REMARKS	WEIGHT
		4	L3x2½x5/16	24	8¼		LB1	506.50	
		2	2-L 2½x2½x5/16	16	8¼		LB3	506.50	
		10	L6x3½x5/16		6	aa3		506.60	
		8	⅞"ø BOLTS A325 GALV.		2	SHOP		W/NEW	
		20	DO		2¼	DO		DO	
		2	ASSEMBLY.	1	2½		M2R	—	
		2	DO	1	2½		M2L	—	
		4	PL 10½x5/16	1	2½	pa		506.60	
		4	L3½x3x3/8	1	2½	aa		DO	
		8	⅞"ø BOLTS A325 GALV.		2	SHOP		W/NEW.	
		1	ASSEMBLY	1	11½		M3R		
		1	DO	1	11½		M3L		
		2	PL 10½x3/16	1	11½	pb		506.60	
		2	L3½x3x3/8	1	11½	ab		DO	
		8	⅞"ø BOLTS A325 GALV.		2	SHOP		W/NEW.	
		4	ASSEMBLY	2	1		M4		
		4	PL 10½x5/16	2	1	pc		506.60	
		4	L3½x3x3/8	2	1	ac		DO	
		16	⅞"ø BOLTS A325 GALV.		2	SHOP		W/NEW.	
		40	L6x4x3/8		7½		K1	506.60	
		FIELD BOLTS							
		116	⅞"ø A325-GALV.		2¼		FIELD	W/NEW.	
		164	DO		2½		DO	DO	

PAY ITEM - AS NOTED

OUT FOR APPROVAL	3-27-07									
OUT FOR APPROVAL	4-23-07	5-31-07								
ISSUED TO SHOP										
FIELD & OFFICE										
REV.	REMARKS	DATE	DWN	CHK	APP	Q.A.	NO.	DIA.	LGT	TYPE	WASHER

PROJECT NO. STP - 1447 (28) STATE PROJECT NO.

MATERIAL: AASHTO M270-36 or 50 ELECTRODES: — HOLES: 15/16" ø SHOP BOLTS:

SURFACE PREP. & PAINT: BLAST CLEAN - SP10
SHERWIN WILLIAMS - 2 COAT SYSTEM
PRIMER - COROTHENE I - GALVAPAC
SECOND COAT - FASTCLAD URETHANE

DESCRIPTION: MISC. TRUSS ITEMS

JOB: IMPROVEMENTS CREAMERY BRIDGE BRADFORD, VT.

CUSTOMER: AUSTIN CONSTR.

	DRAWN BY	DATE
	JPF	3-07
	CHKD BY	
	Ed.	(5)
	APPROV BY	
	Q.A.	
	JOB NO.	DRG. NO.
	314	S3
		REV. △

CASCO BAY STEEL STRUCTURES, INC.
75 SPRING HILL ROAD SACO, MAINE 04072
PHONE (207) 282-7360 FAX. (207) 282-1179