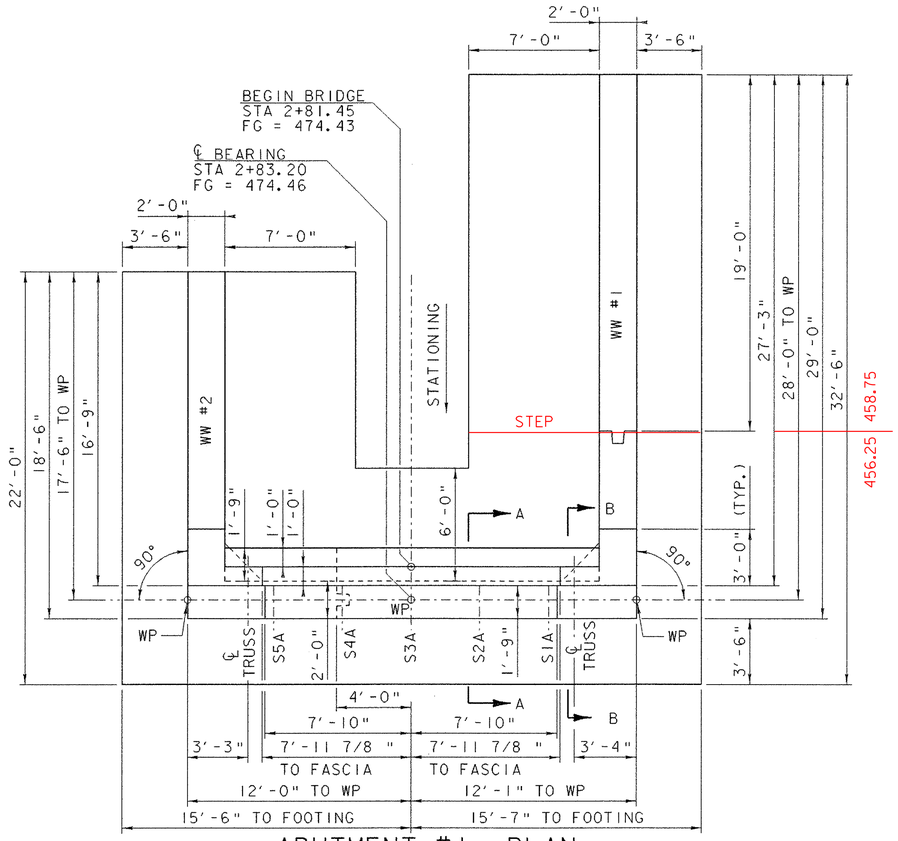

ABUTMENT #1. PLAN

SCALE 1/4" = 1'-0

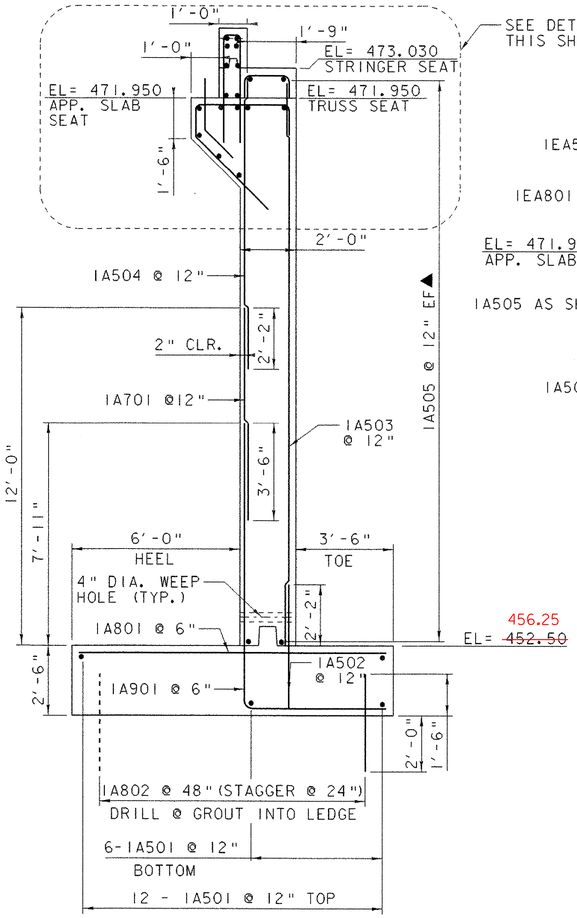

ABUTMENT #1 TYP. SECTION

SCALE 3/8" = 1'-0

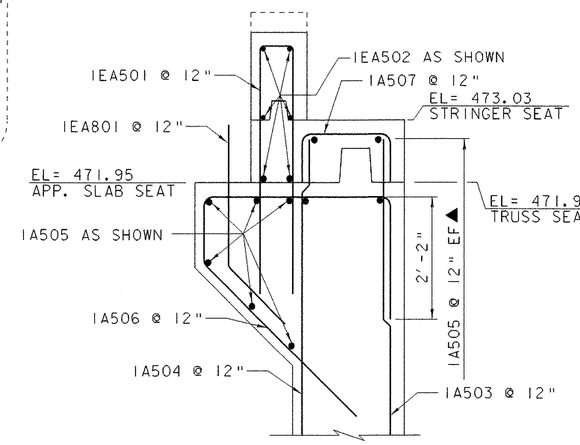

SECTON A-A

SCALE 3/4" = 1'-0

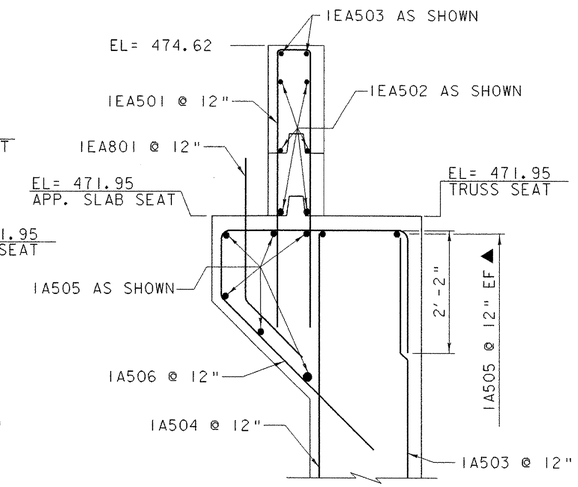

SECTON B-B

SCALE 3/4" = 1'-0

NOTE:

NF = NEAR FACE
FF = FAR FACE
EF = EACH FACE
▲ = CUT TO FIT IN FIELD
3" CLR. UNLESS OTHERWISE SPECIFIED ON THE PLANS.

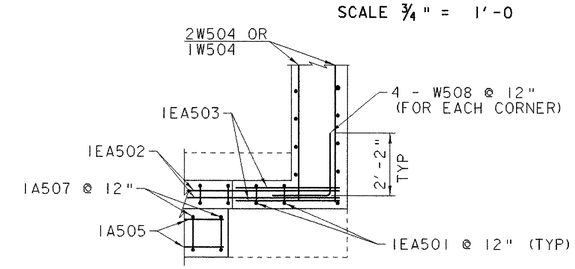

CORNER DETAIL ABOVE TRUSS SEAT

SCALE 3/8" = 1'-0

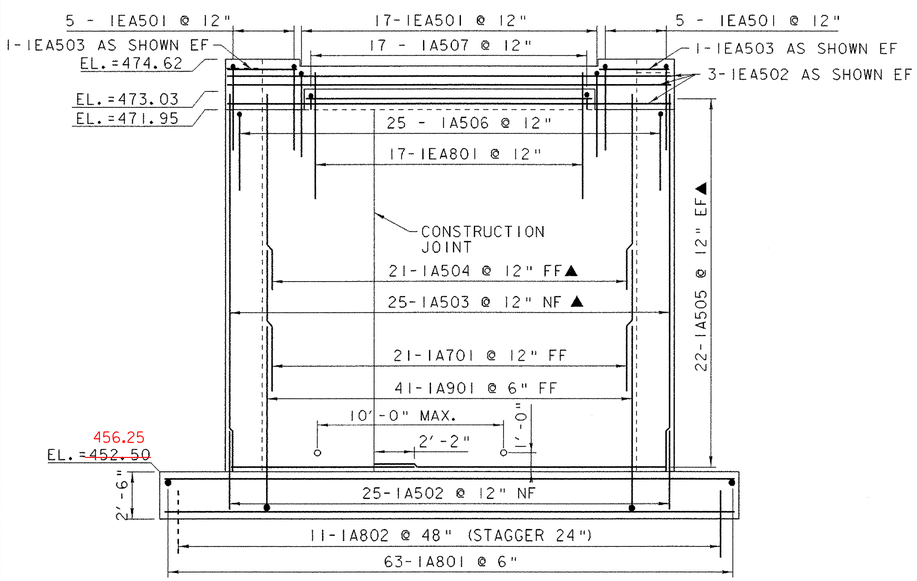

ABUTMENT #. 1 ELEVATION

SCALE 1/4" = 1'-0

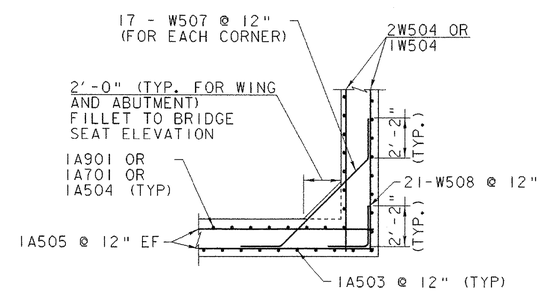

CORNER DETAIL BELOW APPROACH SLAB BRACKET

SCALE 1/4" = 1'-0

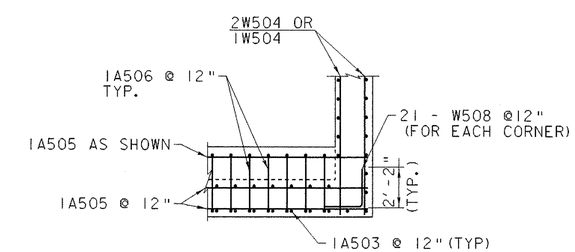

CORNER DETAIL ABOVE APPROACH SLAB BRACKET/ BELOW STRINGER SEAT

SCALE 1/4" = 1'-0

SCALE 3/8" = 1'-0
1 0 1 2 3 4

SCALE 3/4" = 1'-0
1 0 1 2

SCALE 1/4" = 1'-0
1 0 2 4 6

PROJECT NAME: BRADFORD	
PROJECT NUMBER: STP 1447(28)	
FILE NAME: \Structures\s96j286sub.dgn	PLOT DATE: 22-NOV-2006
PROJECT LEADER: C.WILLIAMS	DRAWN BY: D.D.BEARD
DESIGNED BY: M.GAGULIC	CHECKED BY: R.S.YOUNG
ABUTMENT #1	SHEET 24 OF 63