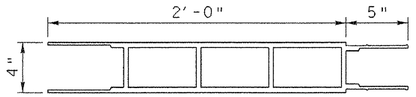

FRP DECK SINGLE MODULE (TYP)

NTS

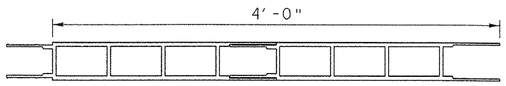

FRP PANEL (1 REQUIRED)

SCALE 1 1/2" = 1'-0

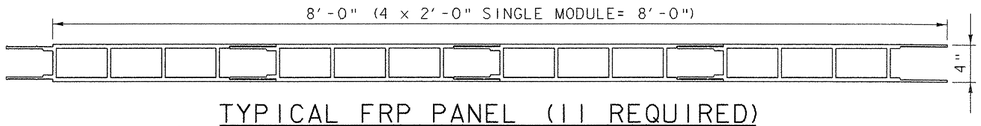

TYPICAL FRP PANEL (11 REQUIRED)

SCALE 1 1/2" = 1'-0

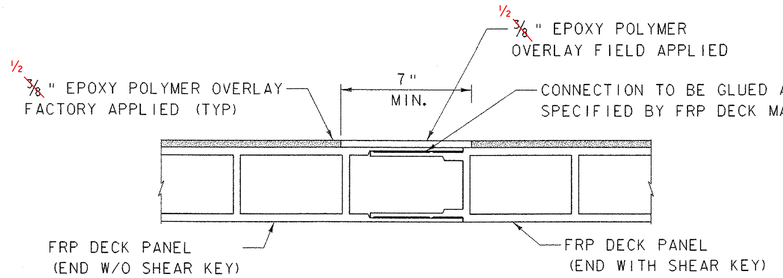

TYPICAL FRP DECK PANEL FIELD SPLICE

SCALE 3" = 1'-0

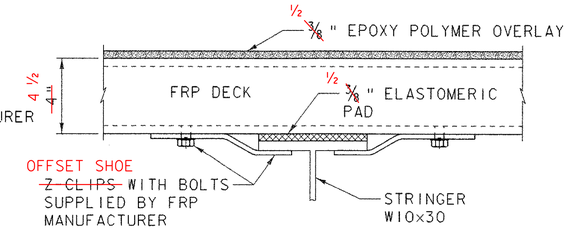

FRP DECK PANEL TO STRINGER CONNECTION DETAIL

SCALE 3" = 1'-0

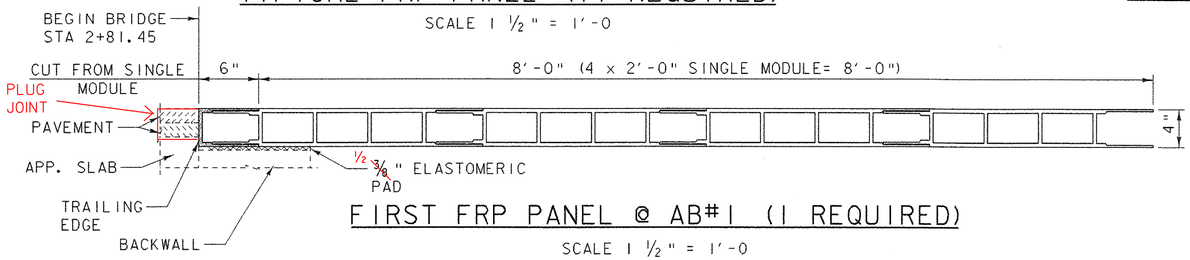

FIRST FRP PANEL @ AB#1 (1 REQUIRED)

SCALE 1 1/2" = 1'-0

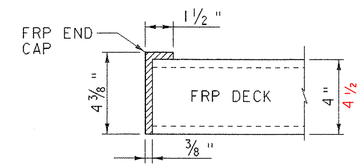

FRP FASCIA END CAP DETAIL

SCALE 3" = 1'-0

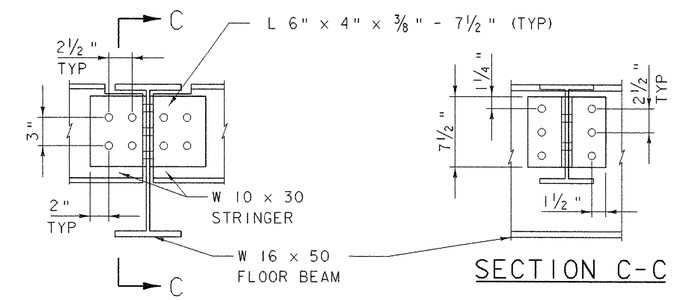

SECTION C-C

CONNECTION DETAIL STRINGER TO FLOOR BEAM SECTION B-B

SCALE 1 1/2" = 1'-0

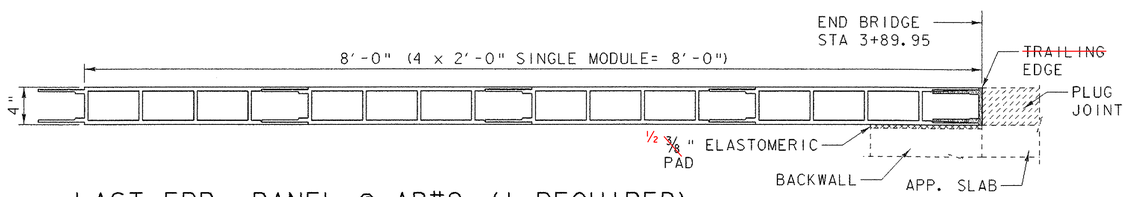

LAST FRP PANEL @ AB#2 (1 REQUIRED)

SCALE 1 1/2" = 1'-0

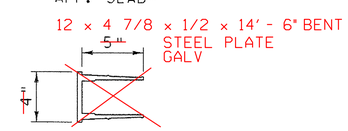

FRP TRAILING EDGE

NTS

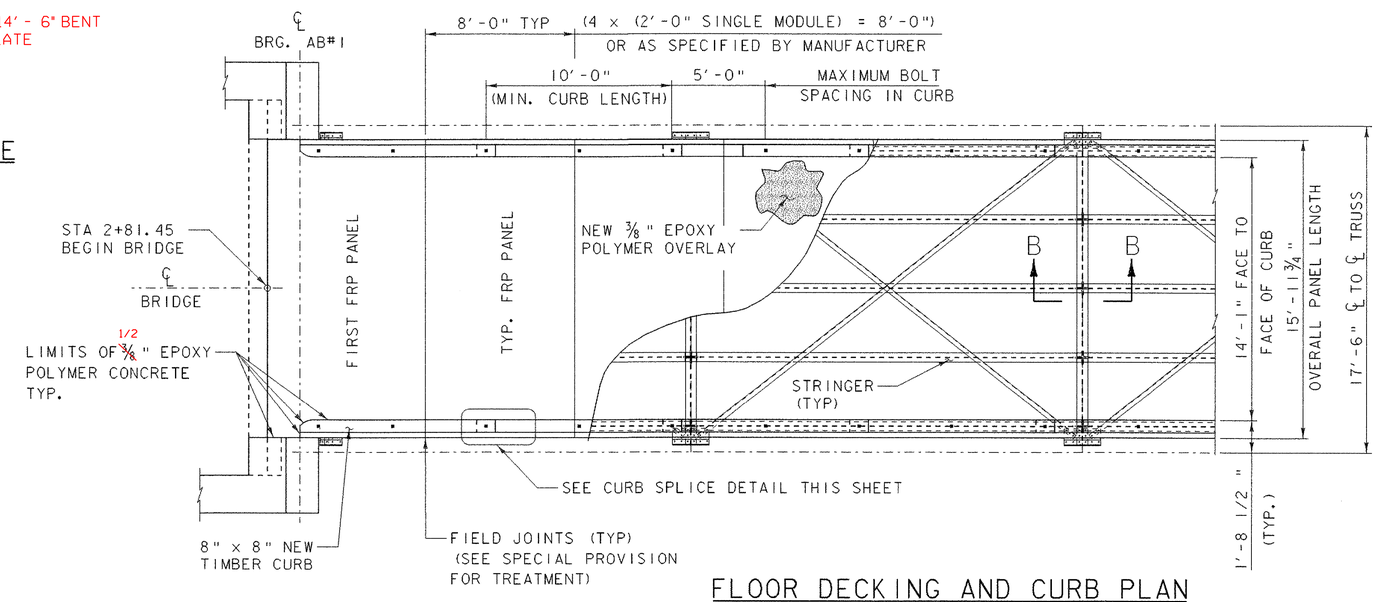

FLOOR DECKING AND CURB PLAN

SCALE 1/4" = 1'-0

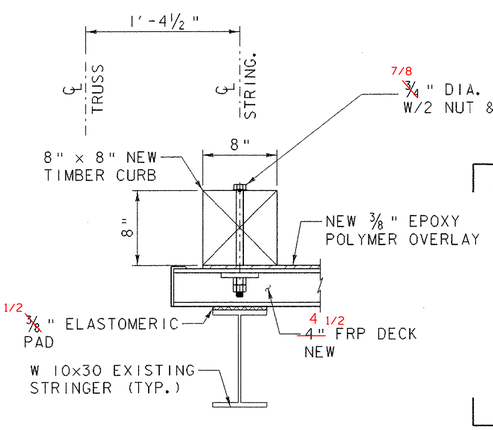

SECTION A-A

SCALE 1 1/2" = 1'-0

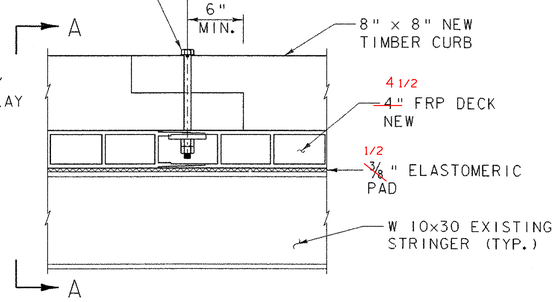

CURB SPLICE DETAIL

SCALE 1 1/2" = 1'-0

NOTE:

ANGLES THAT CONNECT FLOOR BEAMS AND STRINGERS SHALL BE REPLACED ONLY IF EXISTING PLATES ARE NOT REUSABLE. BOLT HOLES FOR OUTSIDE STRINGERS AND CENTER STRINGERS SHALL BE REUSED. ALL OTHER EXISTING HOLES THAT ARE NOT REUSED SHALL BE PLUGGED IN ACCORDANCE WITH NOTE 23 ON SHEET 15.

SCALE 3" = 1'-0

9 6 3 0

SCALE 1 1/2" = 1'-0

1 9 6 3 0 1

SCALE 1/4" = 1'-0

1 0 2 4 6

PROJECT NAME: BRADFORD	
PROJECT NUMBER: STP 1447(28)	
FILE NAME: s96j286\Str\s96j286sup.dgn	PLOT DATE: 22-NOV-2006
PROJECT LEADER: C. P. WILLIAMS	DRAWN BY: M. GAGULIC
DESIGNED BY: M. GAGULIC	CHECKED BY: R.S.YOUNG
FRP DECK AND CURB DETAILS	SHEET 22 OF 63