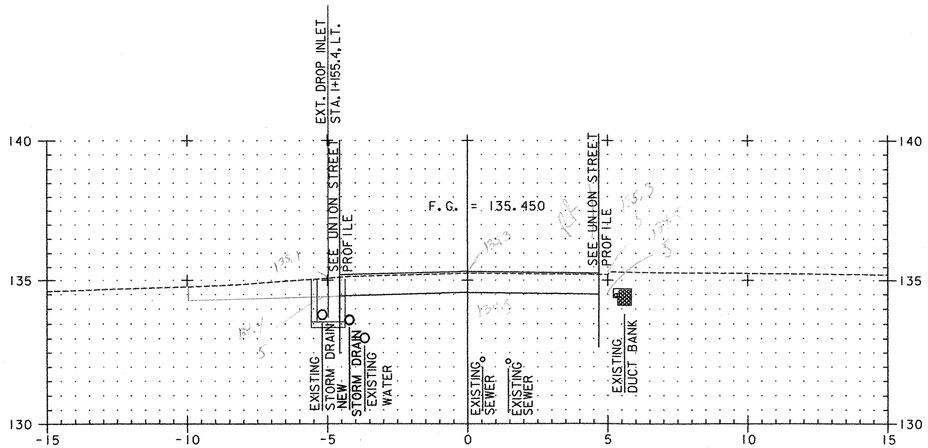

1+160
STOWE STREET

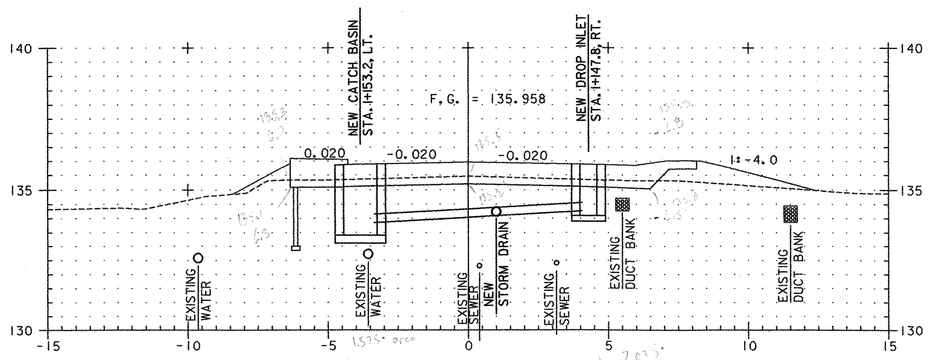

1+150
STOWE STREET

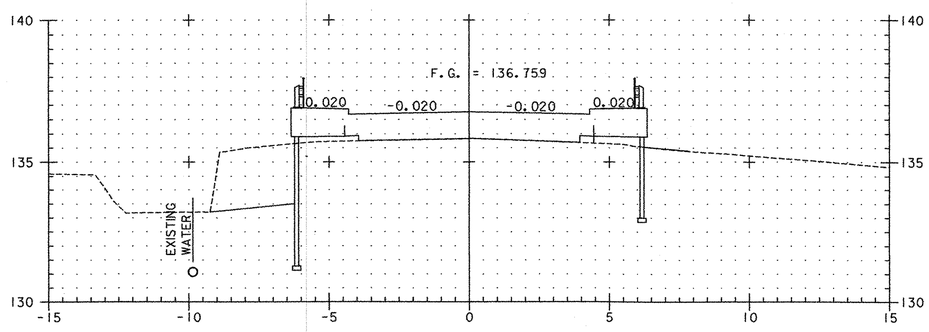

1+140
STOWE STREET

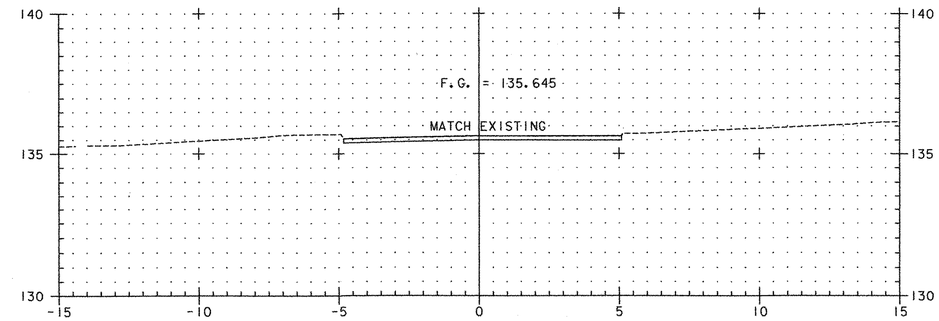

1+190
STOWE STREET

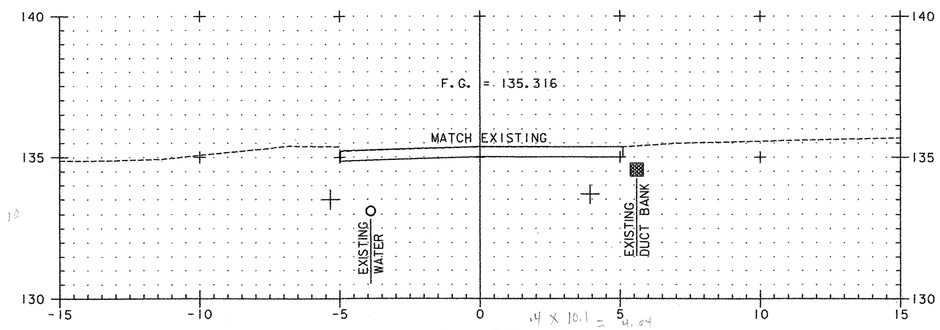

1+180
STOWE STREET

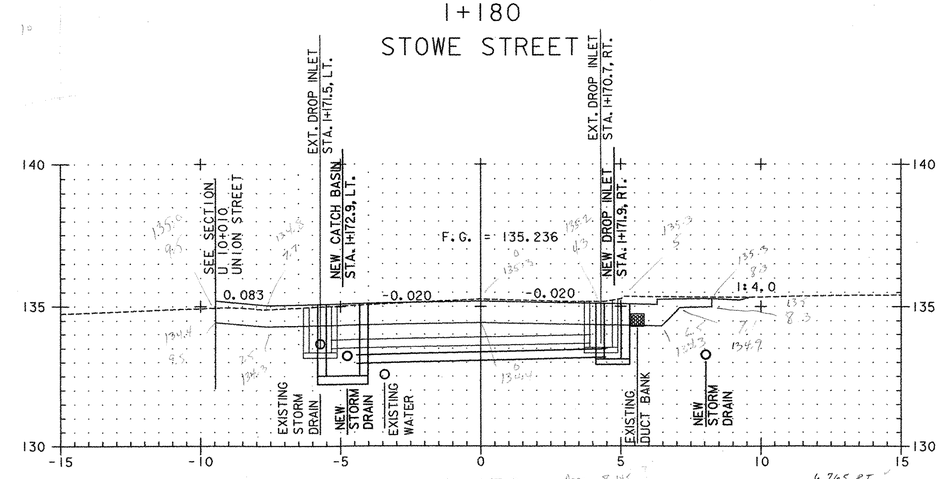

1+170
STOWE STREET
END PROJECT
BEGIN APPROACH

0 5 10
GRAPHIC SCALE 1:100

PROJECT NAME: WATERBURY	
PROJECT NUMBER: BRO 1446(26)	
FILE NAME: ...\49-59 sections.ptf	PLOT DATE: 01/26/2004
PROJECT LEADER: G EDWARDS/R GINGRAS	DRAWN BY: M. MEILLEUR
DESIGNED BY: M. MEILLEUR	CHECKED BY: R GINGRAS
STOWE STREET CROSS SECTIONS	SHEET 51 OF 63

...\pltlies\49-59 sections.plt 01/26/2004 08:19:07 AM