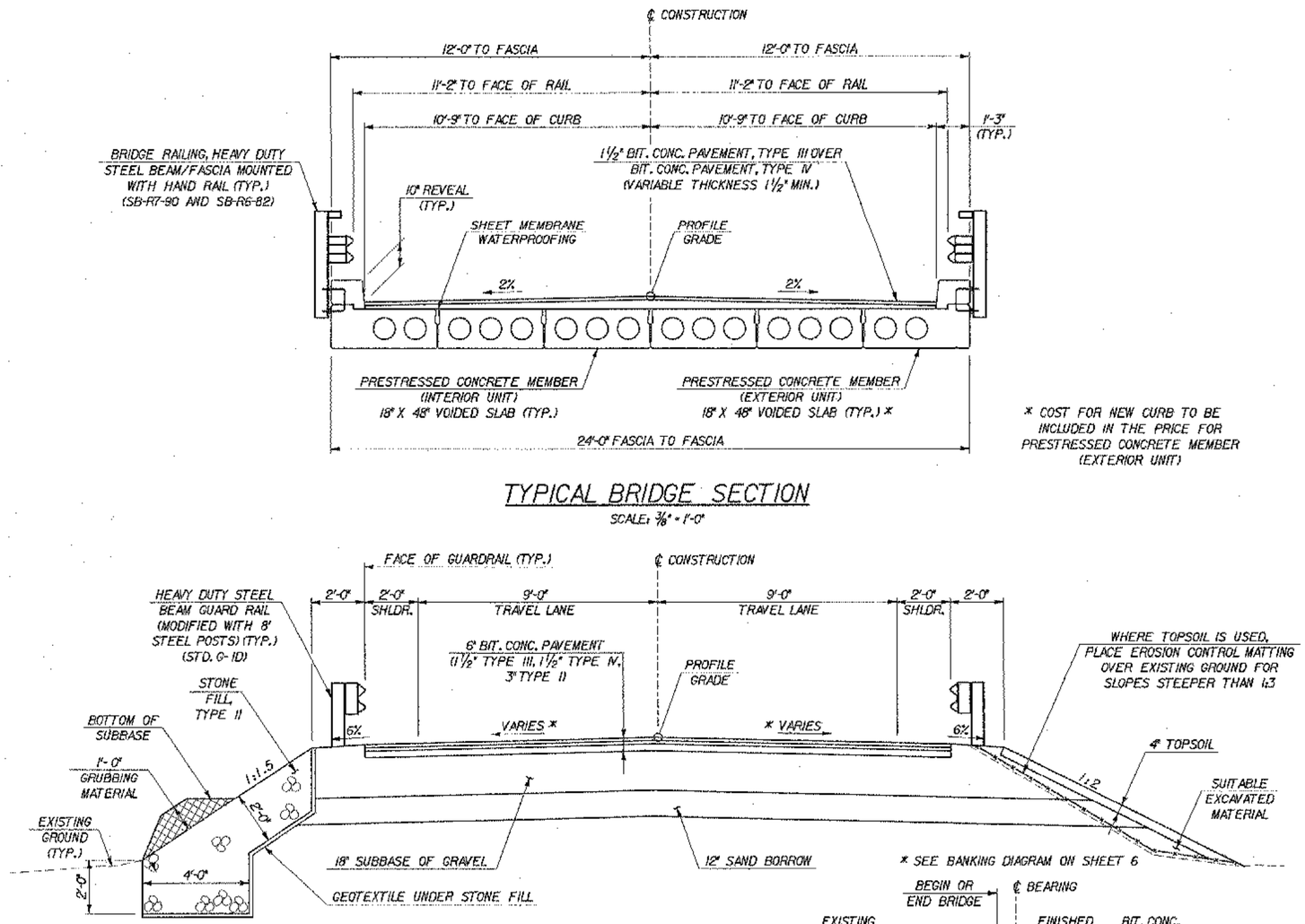

* COST FOR NEW CURB TO BE INCLUDED IN THE PRICE FOR PRESTRESSED CONCRETE MEMBER (EXTERIOR UNIT)

TYPICAL BRIDGE SECTION

SCALE: 3/8" = 1'-0"

TYPICAL ROADWAY SECTION

SCALE: 3/8" = 1'-0"

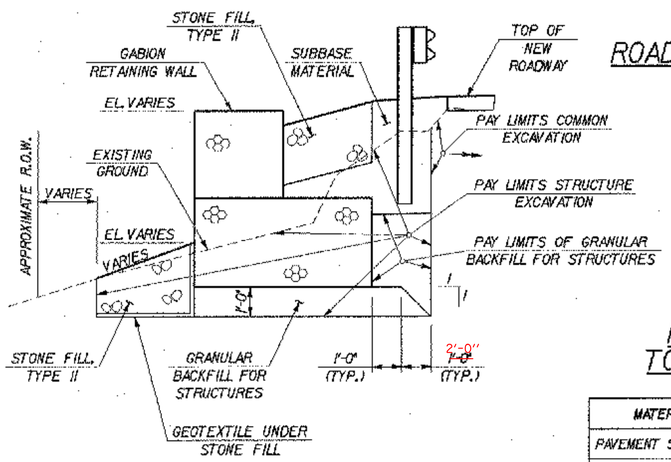

TYPICAL GABION WALL SECTION

SCALE: 3/8" = 1'-0"

MATERIAL TOLERANCES

MATERIAL ITEM	TOLERANCE
PAVEMENT SURFACE COURSE	± 1/4"
PAVEMENT BASE COURSE	± 1/2"
SUBBASE	± 1"
SAND BORROW	± 1"

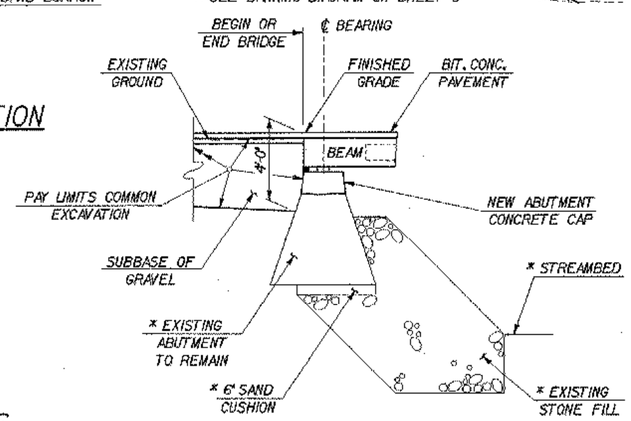

* REFERENCE: EXISTING BRIDGE PLANS

TYPICAL ABUTMENT SECTION

SCALE: 1/4" = 1'-0"

FINAL HYDRAULICS REPORT

HYDROLOGIC DATA

DRAINAGE AREA = 7.2 SQUARE MILES
CHARACTER OF TERRAIN:
CHARACTER & TYPE OF STREAM:
NATURE OF STREAMBED:

Q2.33 = Q50 =
Q10 = Q100 =
Q25 = Q500 =

DATE OF FLOOD OF RECORD:
WATER SURFACE ELEV.: ESTIMATED DISCHARGE:
NATURAL STREAM VELOCITY @ Q =
ICE CONDITIONS: DEBRIS:
DOES THE STREAM REACH MAXIMUM HIGHWATER ELEVATION RAPIDLY?
IS ORDINARY RISE RAPID?
IS STAGE AFFECTED BY UPSTREAM OR DOWNSTREAM CONDITIONS?
IF YES, DESCRIBE.

WATERSHED STORAGE ___ HEADWATERS ___ UNIFORM THROUGHOUT WATERSHED ___ IMMEDIATELY ABOVE SITE ___

EXISTING STRUCTURE

STRUCTURE TYPE: SINGLE SPAN STEEL BEAM WITH CONCRETE DECK YEAR BUILT: 1954
CLEAR SPAN (NORMAL TO STREAM): 35.0 FEET
VERTICAL CLEARANCE ABOVE STREAMBED: 8.0 FEET
WATERWAY OF FULL OPENING:
DISPOSITION OF STRUCTURE: SUPERSTRUCTURE TO BE REPLACED

TYPE OF MATERIAL UNDER SUBSTRUCTURE:

WATER SURFACE ELEV. @ Q2.33 = VELOCITY=
Q10 = "
Q25 = "
Q50 = "
Q100 = "

LONG TERM STREAM BED CHANGES:

IS THE ROADWAY OVERTOPPED BELOW THE Q100? ___ FREQUENCY:
RELIEF ELEVATION: ___ DISCHARGE OVER ROAD @ Q100:

UPSTREAM STRUCTURE: TOWN: DISTANCE:
HIGHWAY NO.: STRUCTURE NO.:
STRUCTURE TYPE:
CLEAR SPAN: CLEAR HEIGHT:
YEAR BUILT: FULL WATERWAY:

DOWNSTREAM STRUCTURE: TOWN: DISTANCE:
HIGHWAY NO.: STRUCTURE NO.:
STRUCTURE TYPE:
CLEAR SPAN: CLEAR HEIGHT:
YEAR BUILT: FULL WATERWAY:

PROPOSED STRUCTURE

STRUCTURE TYPE: SINGLE SPAN PRECAST VOIDED SLAB

CLEAR SPAN (NORMAL TO STREAM): 35.0 FEET
VERTICAL CLEARANCE ABOVE STREAMBED: 8.0 FEET
WATERWAY OF FULL OPENING:

WATER SURFACE ELEV. @ Q2.33 = VELOCITY=
Q10 = "
Q25 = "
Q50 = "
Q100 = "

IS THE ROADWAY OVERTOPPED BELOW THE Q100? ___ FREQUENCY:
RELIEF ELEVATION: ___ DISCHARGE OVER ROAD @ Q100:

AVERAGE LOW ELEVATION OF SUPERSTRUCTURE:
VERTICAL CLEARANCE @ Q =

SCOUR:
REQUIRED CHANNEL PROTECTION:

PERMIT INFORMATION

STRUCTURE TYPE: YEAR BUILT:

AVERAGE DAILY FLOW:
ORDINARY LOW WATER: DEPTH:
ORDINARY HIGH WATER: EL 676 +/- (SEE NOTE 2) DEPTH:

ADDITIONAL COMMENTS

1. HYDRAULIC STUDIES WERE NOT PERFORMED FOR THIS PROJECT.
2. ORDINARY HIGH WATER (O.H.W.) WAS ESTIMATED IN THE FIELD.

TRAFFIC DATA

YEAR	ADT	DHV	% D	% T	ADTT
2003	649	75	50	9	60
2023	1425	200	50	9	130

18 kip ESAL for flexible pavement from 2003 to 2023 : 188,000
18 kip ESAL for flexible pavement from 2003 to 2043 : 598,000
Design speed: 30 MPH

DESIGN CRITERIA:
1. DESIGN LIVE LOAD AASHTO HS 25-44
2. DESIGN SPAN 37.0 FEET
3. ALLOWABLE LOAD FOR SPREAD FOOTINGS ON SOIL 4 KSF (ASSUMED) ON LEDGE N/A
4. ALLOWABLE LOAD FOR PILING N/A TYPE N/A ESTIMATED LENGTH N/A
5. STRUCTURAL STEEL AASHTO GRADE N/A
6. REINFORCING STEEL GRADE 60
7. CONCRETE CLASS B (HPC-B) f'_c = 3500 PSI

TRAFFIC MAINTENANCE:
1. IS TRAFFIC TO BE MAINTAINED? NO * IF YES, ON EXISTING STRUCTURE N/A OR ON TEMPORARY BRIDGE N/A
   * TRAFFIC WILL BE DETOURED AROUND THE BRIDGE SITE.
2. TEMPORARY BRIDGE REQUIREMENTS: ONE OR TWO WAY N/A TRAFFIC CONTROL SIGNALS REQUIRED NO
   ARE SIDEWALKS REQUIRED? NO IF SO, ON WHAT SIDE? N/A

LOAD RATING (TONS)

LEVELS	TRUCK						
	H	HS	3S2	6 AXLE	3A. STR.	4A. STR.	5A. SEMI
INVENTORY							
POSTED							
OPERATING							

* LOAD RATING TABLE TO BE COMPLETED BY FABRICATOR. SEE CONSTRUCTION NOTES ON SHEET 10.

McFarland-Johnson, Inc.

STATE OF VERMONT
AGENCY OF TRANSPORTATION

Town Of WATERBURY — Bridge No. 14
Highway No. 6 — Log Sta. / Surv. Sta.

LOOMIS HILL ROAD OVER THATCHER BROOK

PRELIMINARY INFORMATION SHEET

Designed By L. WIXSON — Drawn By P. DUSTIN
Checked By R. JOY Date 03/03 — Bridge Design Supervisor M. ZYDEL Date 03/03

PROJECT WATERBURY — PROJECT NO. TH 3-9637

I.G.C. Info. m:\549\08-Waterbury\BRIDGE\6conf\x1278pl.dgn

Bridge Sheet No. — Sheet 2 of 18

05-MAY-2003 PLOTTED