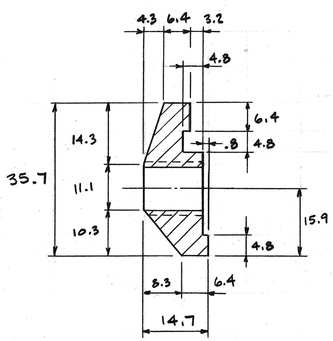

CLAMP BAR #4 (80 REQ'D.)

SECT. A-A

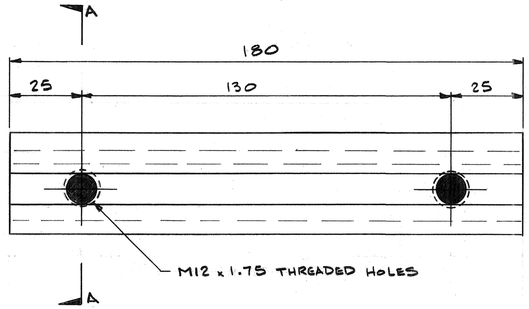

"CLAMP BAR"
ALLOY 6061-T6

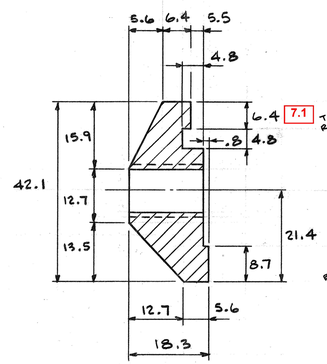

CLAMP BAR #1 (232 REQ'D.)

SECT. A-A

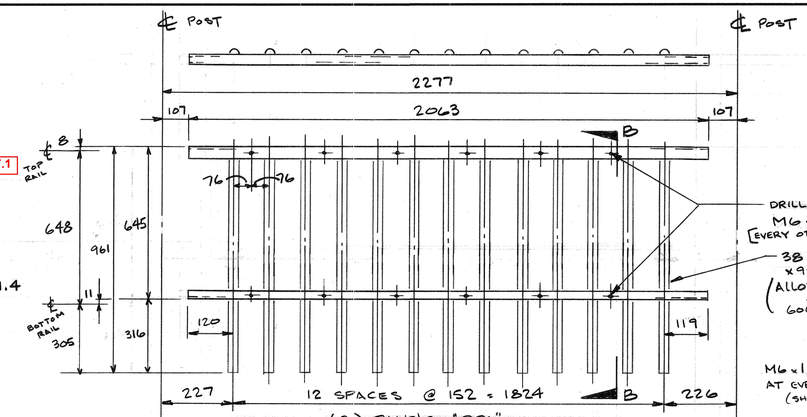

(9) PANELS "PP1"

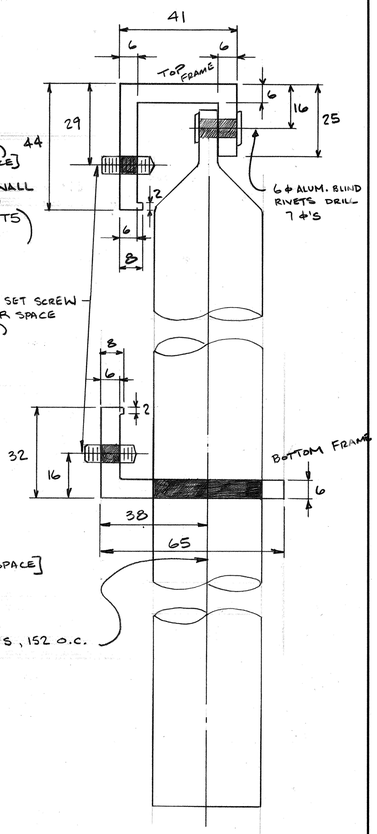

SECT. B-B

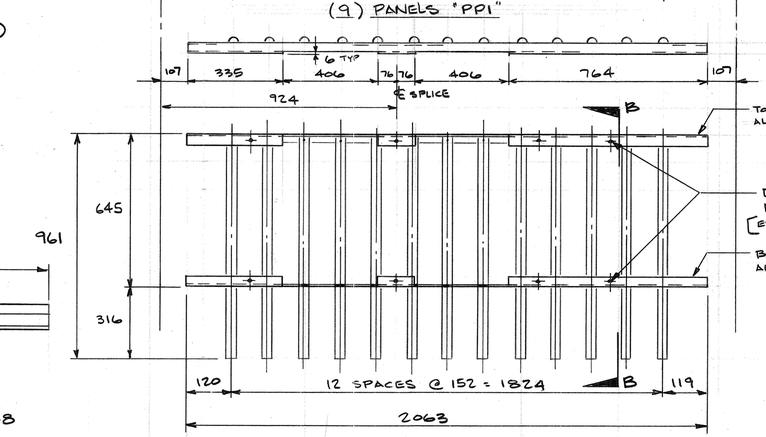

(3) PANELS "PP2"

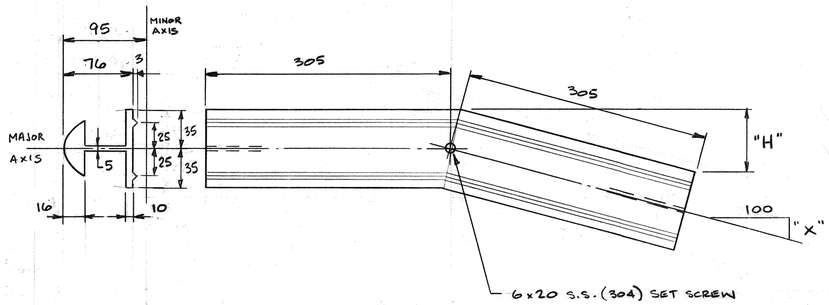

HANDRAIL SPLICE
ALLOY 6061-T6

QTY	Pc. Mk.	"X"	"H"
2	HS1	9	27
4	HS2	0	0
1	HS3 *	6	18
1	HS4	7	21

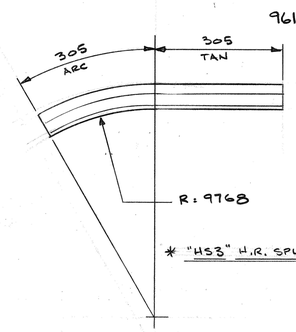

"PLAN VIEW"

* "HS3" H.R. SPLICE (1) REQ'D.

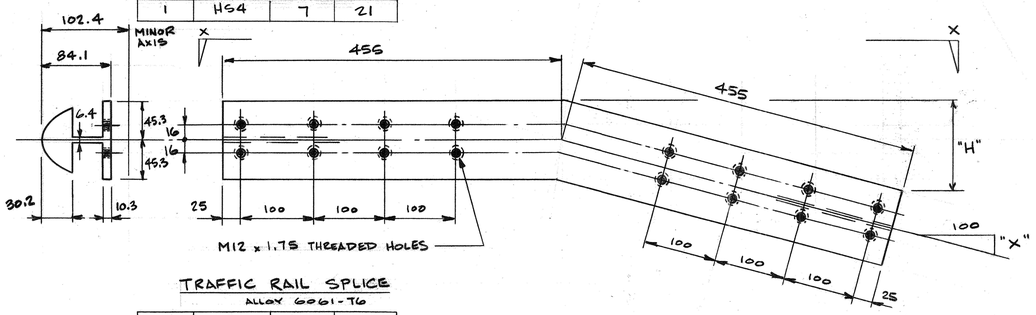

TRAFFIC RAIL SPLICE
ALLOY 6061-T6

QTY.	Pc. Mk.	"X"	"H"
4	TS1	9	41
8	TS2	0	0
2	TS3 *	3	14
2	TS4 *	0	0
2	TS5 *	1	5
2	TS6	1	5

* = DOUBLE BEND

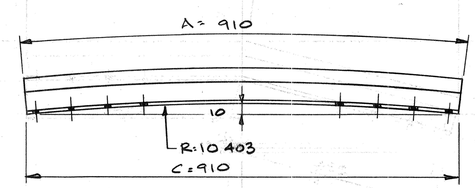

TRAFFIC RAIL SPLICE ~ "TS3" (2 REQ'D.)
ALLOY 6061-T6

PLAN X-X

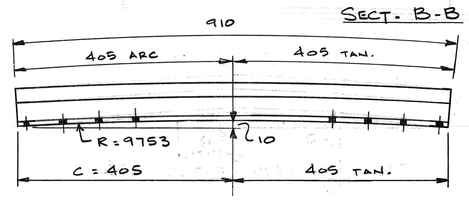

TRAFFIC RAIL SPLICE ~ "TS5" (2 REQ'D.)
ALLOY 6061-T6

PLAN X-X

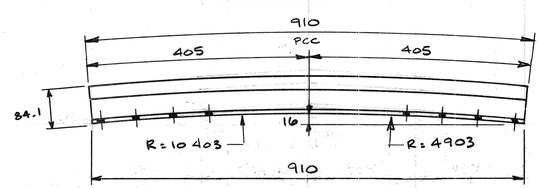

TRAFFIC RAIL SPLICE ~ "TS4" (2 REQ'D.)
ALLOY 6061-T6

PLAN X-X

ALL DIMENSIONS ARE IN MILLIMETRES

STATE OF VERMONT
AGENCY OF TRANSPORTATION

RECIEVED 08/20/2009
CK BY THL OK BY WDL
ACTION APPROVED AS NOTED
BY CWC DATE 08/26/2009

ISSUE	DATE	DESCRIPTION	BY
1	8-13-09	FOR APPROVAL	TB

AUCIELLO IRON WORKS INC
560 MAIN ST. HUDSON, MA (978) 568-8382

VERMONT AGENCY OF TRANSPORTATION
TOWN OF LINCOLN
COUNTY OF ADDISON
ROUTE NO. T.H. 9 CL3 BRIDGE NO. 48
PROJECT NO. BRO 1445 (25)

ALUMINUM BRIDGE RAILING COMPONENTS

SURFACE PREP: NONE
FINISH: ANODIZE BLACK SATIN FINISH
FOR: F.R. LAFAYETTE, INC.
DR: 5/22/09
CHK:
DWG. NO. BR-2959
JOB NO. AB97048-1001
SHEET 1-F3 OF 4

B.L. MAKEPEACE INC. 10/08/19