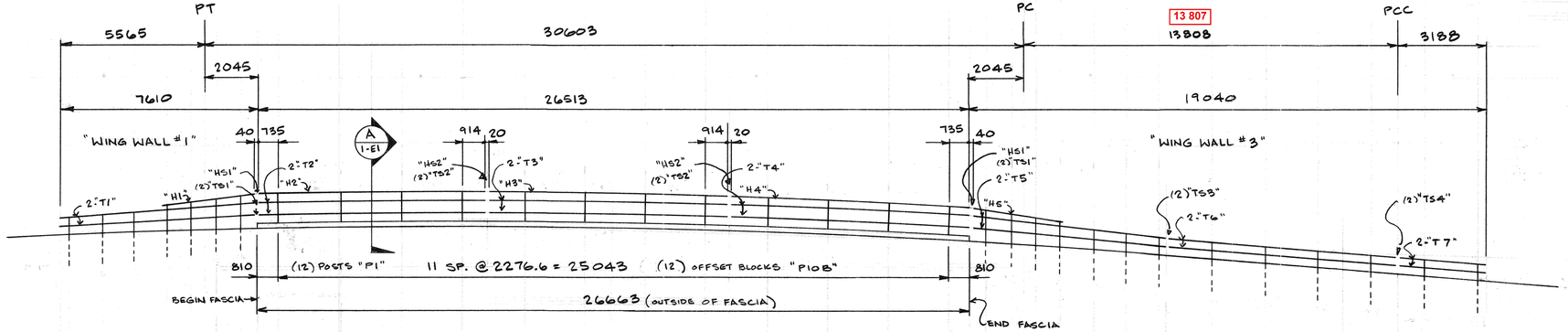

ELEVATION C-C (CURB)

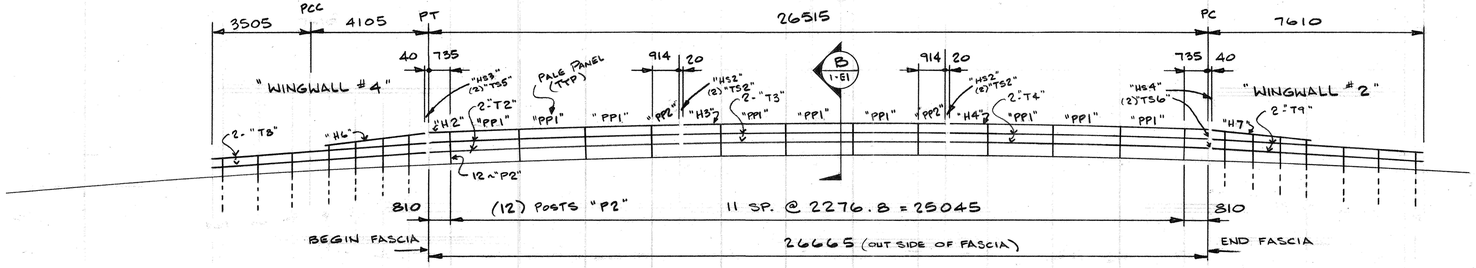

ELEVATION D-D (SIDEWALK)

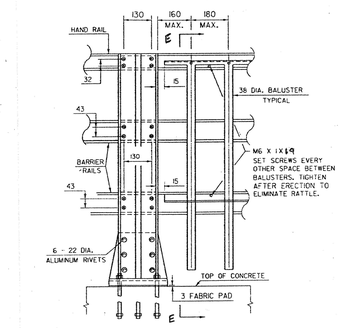

OUTSIDE ELEVATION OF THREE RAIL POST & SPINDLES AT "SIDEWALK"

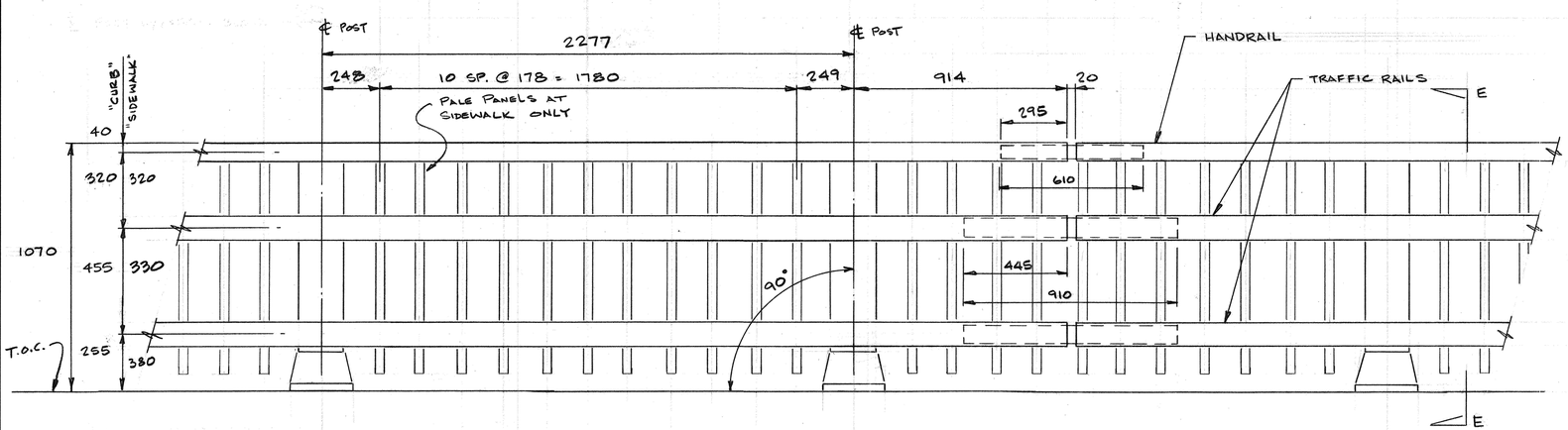

TYPICAL DETAILS AT BRIDGE RAILING

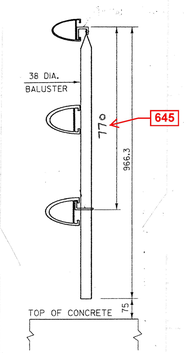

SECTION E-E

ALL DIMENSIONS ARE IN MILLIMETRES

OFFSET BLOCKS				JOB No. AB97048			
QTY.	Pc.Mk.	QTY.	Pc.Mk.	DESCRIPTION	101.6 x 79.4 HANDRAIL		
12	P10B	12	P1	BRIDGE RAIL POSTS	QTY.	Pc.Mk.	LENGTH *
1	A1-1	12	P2	"	1	H1	3567
1	A1-2	1	1-1	APPROACH RAIL POSTS	2	H2	8482
1	A1-3	1	1-2		2	H3	9086
1	A1-4	1	1-3		2	H4	9097
1	A1-5	1	1-4		1	H5	3583
1	A1-6	1	1-5		1	H6	3557
1	A1-7	1	1-6		1	H7	3555
1	A3-1	1	1-7				
1	A3-2	1	3-1				
1	A3-3	1	3-2		120.7 x 101.6 TRAFFIC RAIL		
1	A3-4	1	3-3		QTY.	Pc.Mk.	LENGTH *
1	A3-5	1	3-4		2	T1	7601
1	A3-6	1	3-5		4	T2	8482
1	A3-7	1	3-6		4	T3	9086
6	A3-8	1	3-7		4	T4	9097
1	A4-1	6	3-8		2	T5	7642
1	A4-2	1	4-1		2	T6	8272
1	A4-3	1	4-2		2	T7	3201
1	A4-4	1	4-3		2	T8	7600
1	A4-5	1	4-4		2	T9	7583
1	A4-6	1	4-5		*: ADJUSTED FOR SLOPE		
1	A4-7	1	4-6				
1	A2-1	1	4-7		QTY.	Pc.Mk.	DESCRIPTION
1	A2-2	1	2-1		80	#4	CLAMP BARS
1	A2-3	1	2-2		232	#1	CLAMP BARS
1	A2-4	1	2-3		2	HS1	HANDRAIL SPLICE
1	A2-5	1	2-4		4	HS2	"
1	A2-6	1	2-5		4	TS1	TRAFFIC RAIL SPL.
1	A2-7	1	2-6		8	TS2	
		1	2-7		2	TS3	
		9	PP1	PALE PANEL ASSEM.	2	TS4	
		2	PP2	"			
		24		POST PADS			
		24		ANCHOR BOLT ASSEMBLIES	2	TS5	TRAFFIC RAIL SPL.
240	M12 x 2 x 38 S.S. HEX HEAD BOLTS				2	TS6	TRAFFIC RAIL SPL.
160	M12 x 2 x 19 do				1	HS4	HANDRAIL SPLICE
464	M12 x 2 x 25 do				1	HS3	HANDRAIL SPLICE
560	M12 S.S. FLAT WASHER						
624	M12 ALUM. FLAT WASHERS						
240	M12 x 2 S.S. HEX NUTS						
320	"C" BOLTS						
24	GALV. ANCHOR PLATE						
120	M20 x 2.5 x 254 GALV. BOLT (A325 STL.)						
120	M20 x 2.5 GALV. HEX NUT (A563)						
120	M20 GALV. WASHER (F436)						

STATE OF VERMONT
AGENCY OF TRANSPORTATION
RECIEVED 08/20/2009
CK BY THL OK BY WDL
ACTION APPROVED AS NOTED
BY CWC DATE 08/26/2009

ISSUE	DATE	DESCRIPTION	BY
1	8-13-09	FOR APPROVAL	B

AUCIELLO IRON WORKS INC
560 MAIN ST. HUDSON, MA (978) 568-8382

VERMONT AGENCY OF TRANSPORTATION
TOWN OF LINCOLN
COUNTY OF ADDISON
ROUTE NO.: T.H. 9 CL 3 BRIDGE NO.: 43
PROJECT NO.: BRO 1445 (25)

ALUMINUM BRIDGE RAILING w/APPROACH

SURFACE PREP: NONE
FINISH: ANODIZED BLACK SATIN FINISH

FOR: F.R. LAFAYETTE, INC.
DR: 5/16/09
CHK:
JOB NO. AB97048-1001
DWG. NO. BR-2959
SHEET 1-E2 OF 4

B.L. MAKEPEACE INC. 10/08/18