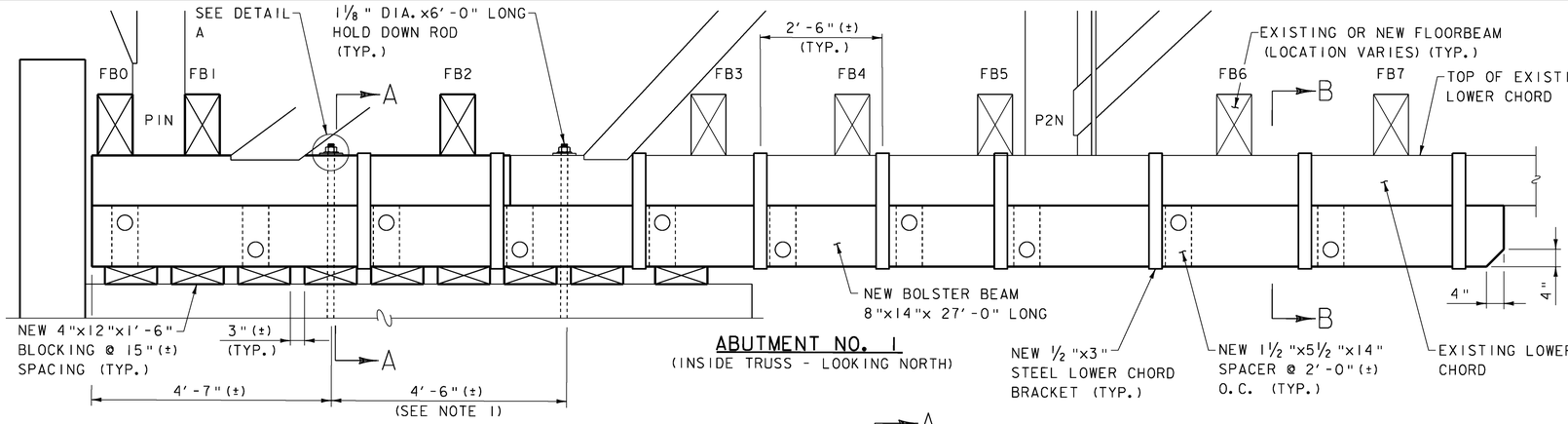

ABUTMENT NO. 1

(INSIDE TRUSS - LOOKING NORTH)

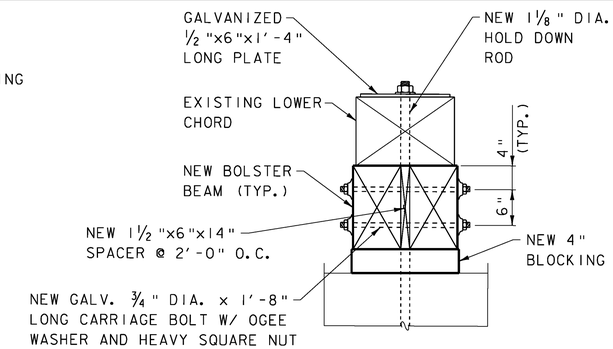

SECTION A-A

SCALE: 1" = 1'-0"

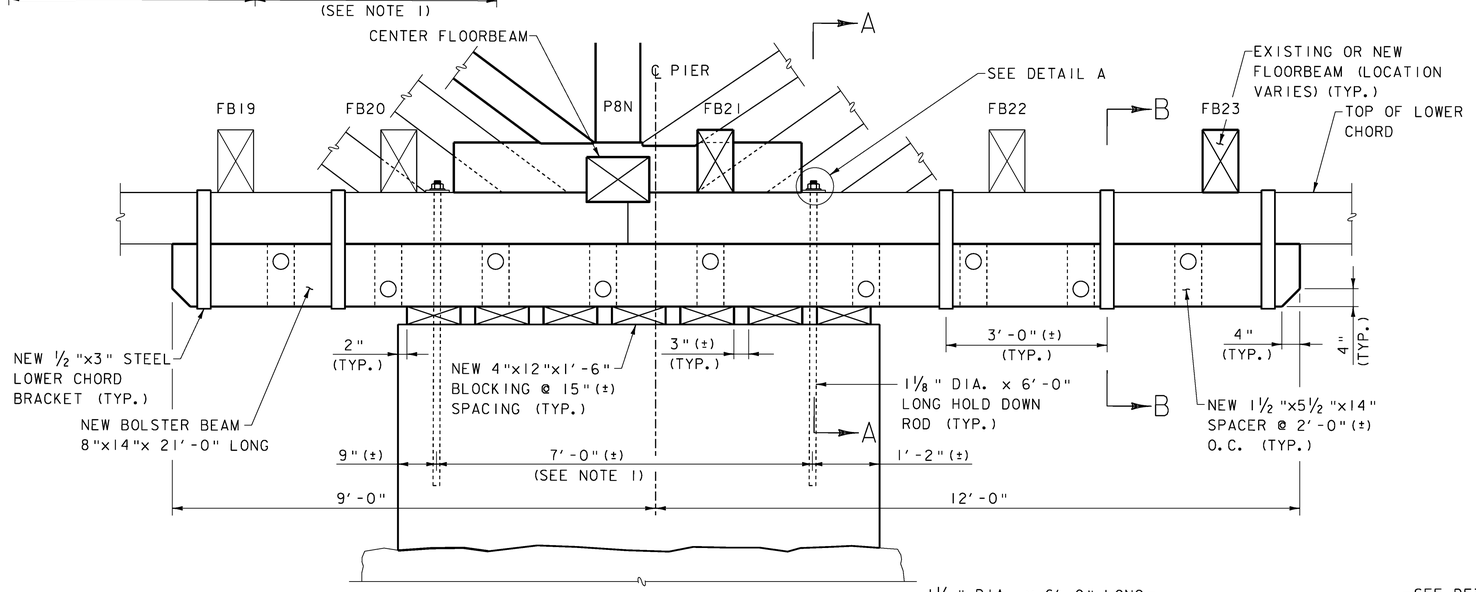

PIER

INSIDE TRUSS - LOOKING NORTH)

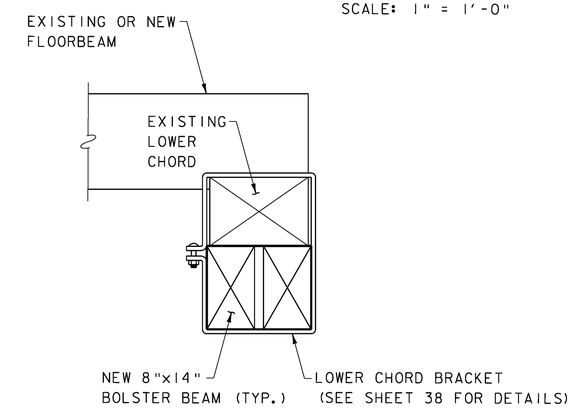

SECTION B-B

SCALE: 1" = 1'-0"

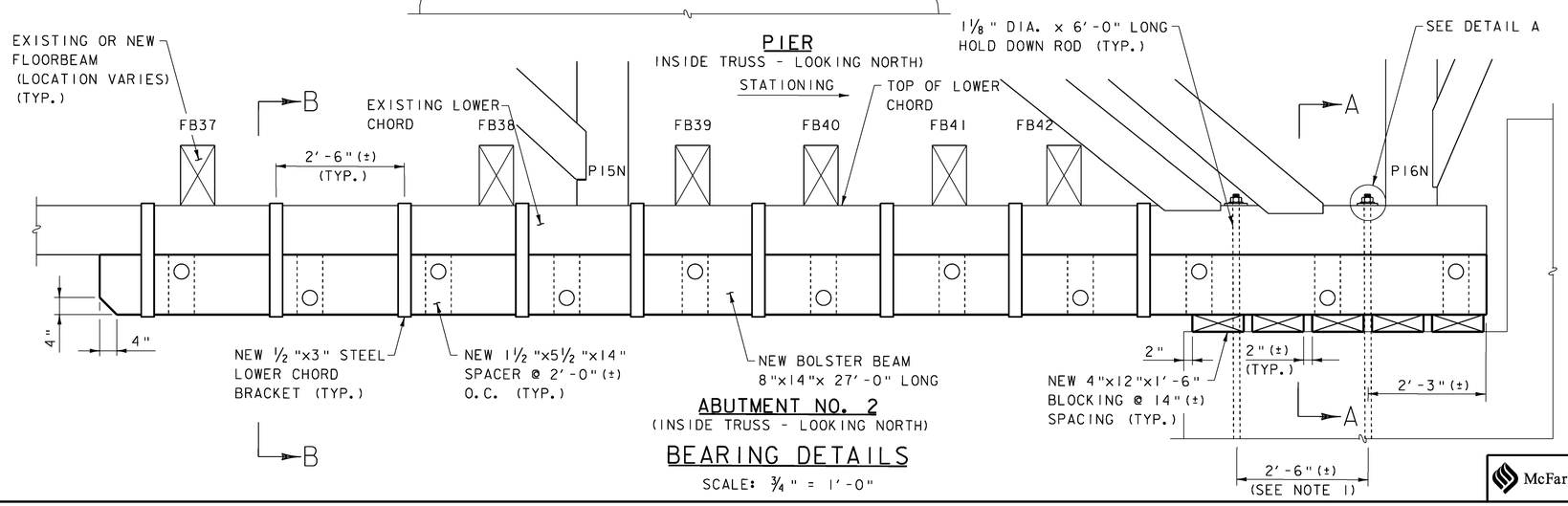

ABUTMENT NO. 2

(INSIDE TRUSS - LOOKING NORTH)

BEARING DETAILS

SCALE: 3/4" = 1'-0"

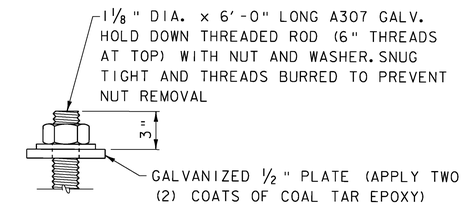

DETAIL A

NOT TO SCALE

SCALE 3/4" = 1'-0

SCALE 1" = 1'-0

NOTES

1. HOLD DOWN RODS SHALL BE PLACED AROUND TRUSS MEMBERS.

McFarland Johnson

PROJECT NAME:	WOODSTOCK	WOODSTOCK
PROJECT NUMBER:	BHO 1444(52)	ST 1444(58)

FILE NAME: z96j262brg.dgn
PROJECT LEADER: M. Sargent
DESIGNED BY: S. Merkwan
COVERED BRIDGE BEARING DETAILS

PLOT DATE: 29-JUN-2012
DRAWN BY: S. Merkwan
CHECKED BY: R. Joy
SHEET 46 OF 68