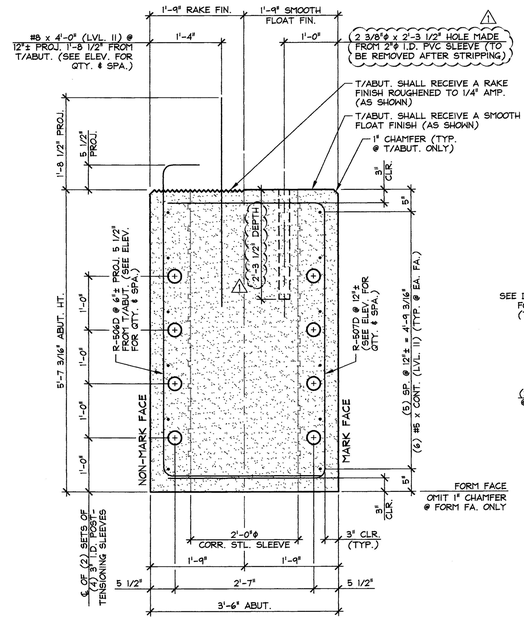

A / AB4 ABUTMENT SECTION
3/4" = 1'-0"

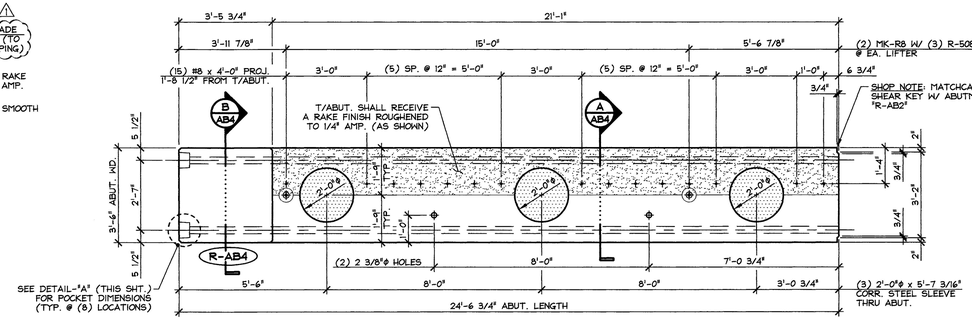

PLAN VIEW IN FORM

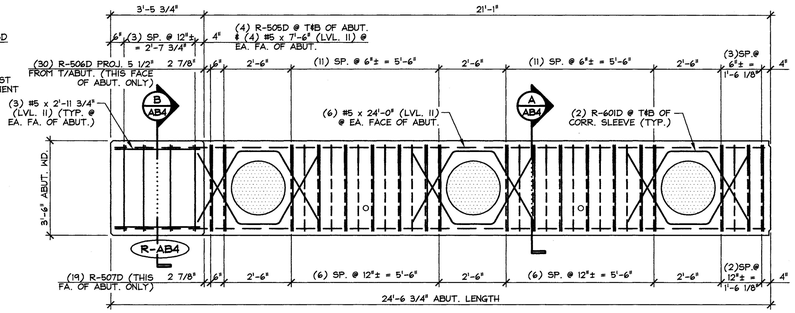

PLAN VIEW IN FORM

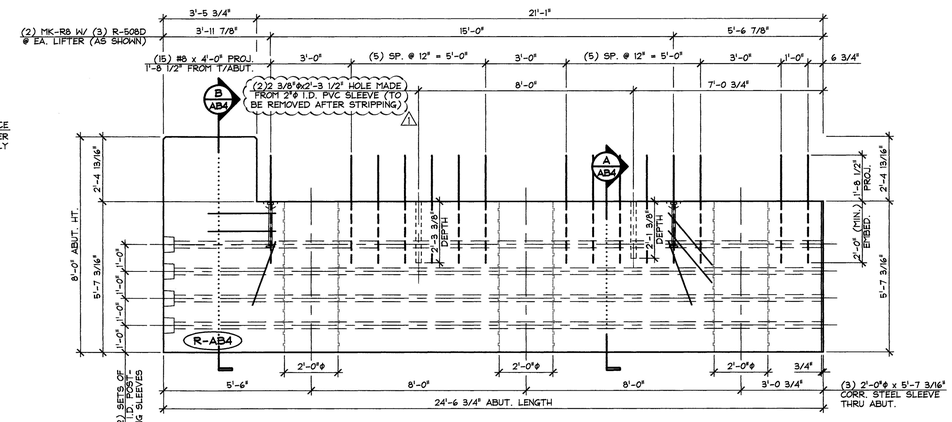

MARK FACE ELEVATION

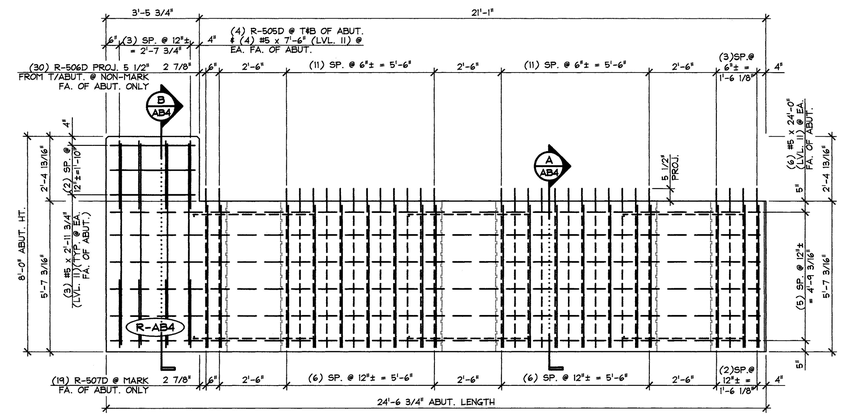

MARK FACE ELEVATION

1 / AB4 ABUTMENT DIMENSIONAL DETAILS
3/8" = 1'-0"

2 / AB4 ABUTMENT REINFORCING DETAILS
3/8" = 1'-0"

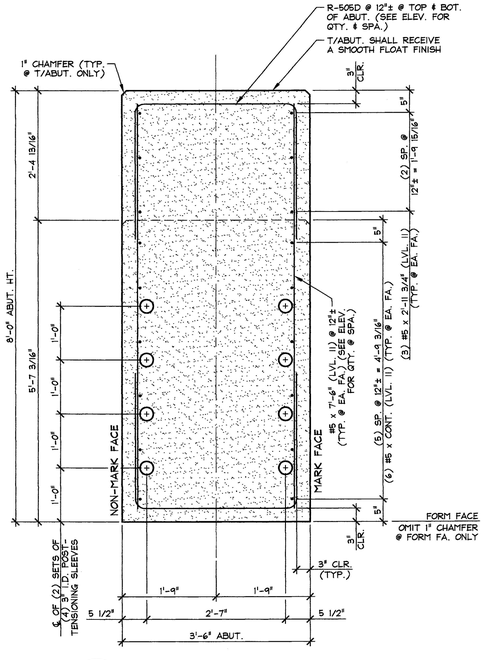

B / AB4 ABUTMENT SECTION
3/4" = 1'-0"

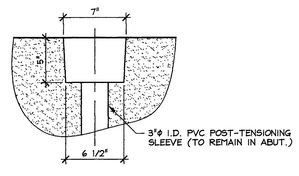

DETAIL - "A"
1 1/2" = 1'-0"

SHOP NOTE:
ALL EDGES OF ABUTMENT SHALL RECEIVE A 1" CHAMFER (U.N.O.)

MARK: R-AB4	QTY.: 1	WT.: 34.32 T	VOL.: 16.95 cy

MATERIAL LIST / ABUTMENT

ITEM	MARK	DESCRIPTION	QTY.
1	R-505D	#5 BENT BAR (LEVEL II, DUAL COATED)	8
2	R-506D	#5 BENT BAR (LEVEL II, DUAL COATED)	30
3	R-507D	#5 BENT BAR (LEVEL II, DUAL COATED)	19
4	R-508D	#5 HAIRPIN (LEVEL II, DUAL COATED)	6
5		#5 x 7'-6" (LEVEL II, DUAL COATED)	8
6		#5 x 24'-0" (LEVEL II, DUAL COATED)	12
7		#5 x 2'-11 3/4" (LEVEL II, DUAL COATED)	6
8			
9	R-601D	#6 BENT BAR (LEVEL II, DUAL COATED)	12
10			
11		#8 x 4'-0" (LEVEL II, DUAL COATED)	15
12			
13		2'-0"ϕ x 5'-7 3/16" CORRUGATED STEEL PIPE (GALV.)	3
14	MK-R8	20T x 19 3/4" SWIFT LIFT LIFTER (GALV.)	2
15			

Vermont Agency of Transportation
RECEIVED
23430-14 Forest Str_Rutland_rev1a.pdf
CK'D BY M. Umberger OK'D BY C. Carlson
July 1, 2014
RESUBMIT No Approved
BY C. Carlson DATE 07/08/2014

⚠ 7-1-14 REVISED AS NOTED

APPROVAL STAMP:

J.P. CARRARA & SONS INC.
Precast & Prestress Manufacturer
2464 CASE STR., MIDDLEBURY, VERMONT 05753 Phone:(802)388-6361 Fax:(802)388-9010

THE BELDEN COMPANY, INC.
CONTRACTOR
RUTLAND, VERMONT

STATE OF VERMONT AGENCY OF TRANSPORTATION
COUNTY OF RUTLAND

DATE: APR. 25, 2014
SCALE: NOTED

CITY OF RUTLAND
ROUTE NO.: TH 13 (FOREST STREET) - URBAN COLLECTOR
BRIDGE NO.: 14 PROJECT NO.: BRF 3000(18)

CHKD: M.D. DFTM: B.L.
JOB NO: 23430-014

PRECAST ABUTMENT DETAILS

DWG. NO: AB4

F:\VT-Bridges\23430-14 Rutland\23430-AB4.dwg, 7/1/2014 2:40:29 PM