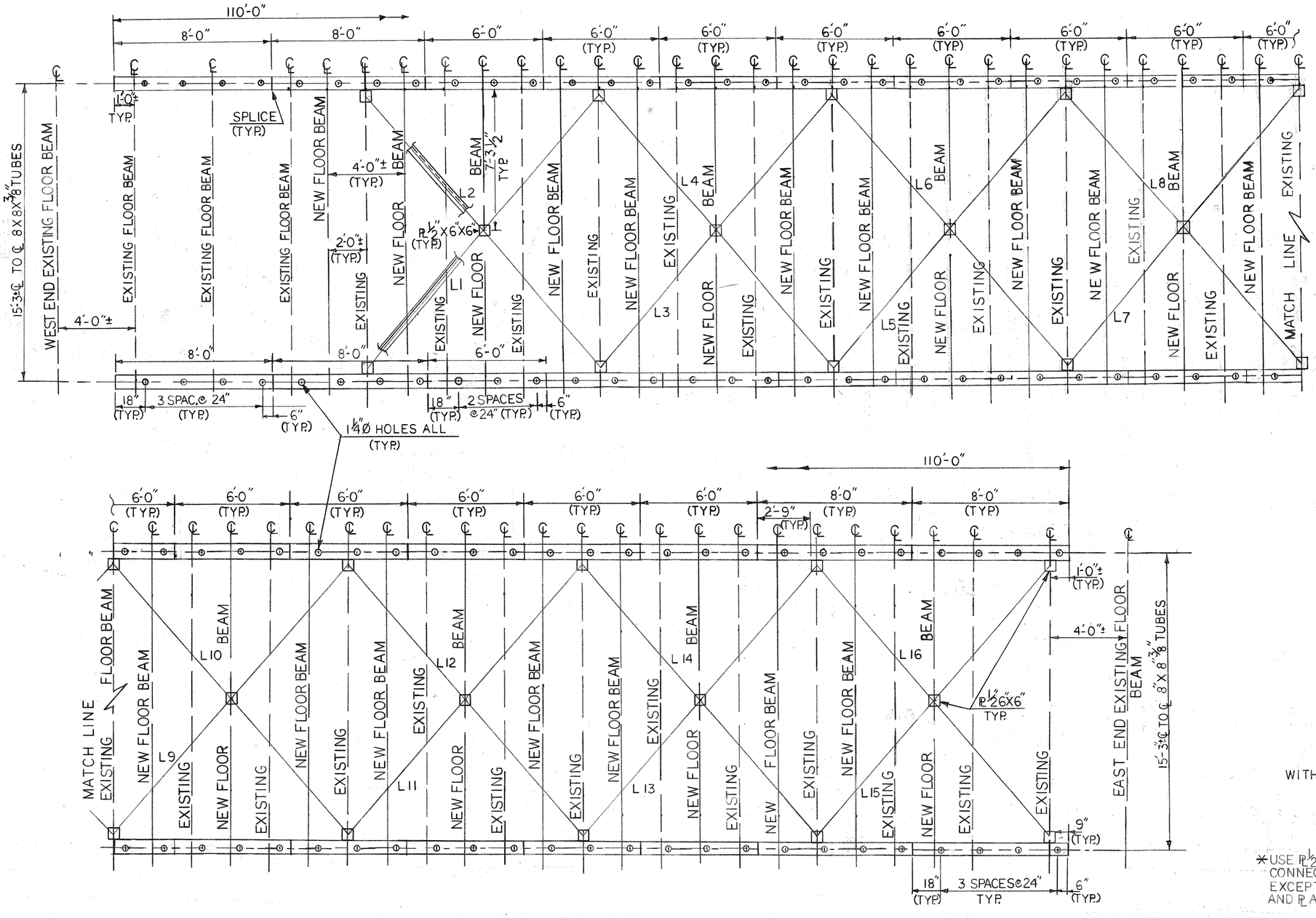

FRAMING PLAN
SCALE ⅜" 1'-0"

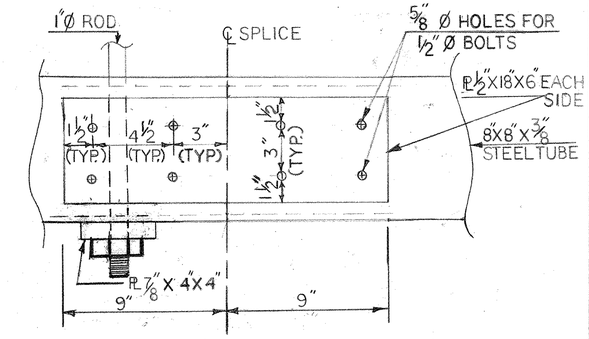

TYPICAL SPLICE DETAIL
SCALE 3" = 1'-0"

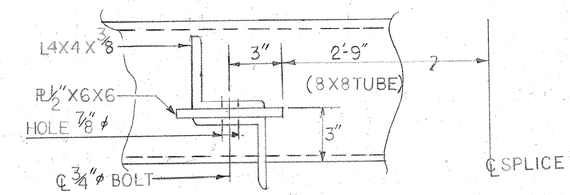

SECTION @ L BRACE
SCALE 3" = 1'-0"

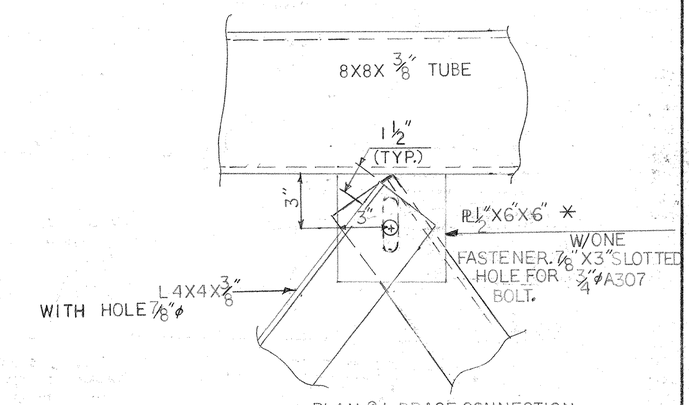

PLAN @ L BRACE CONNECTION
SCALE 3" = 1'-0"

*USE PL½"X6"X6" AT "X" CONNECTION AS WELL, EXCEPT HOLES IN L'S AND PL ALL ⅞" DIAMETER.

STATE OF VERMONT
AGENCY OF TRANSPORTATION

Town Of NEWFANE	Bridge No. 17
Highway No. TH 2, CL. 2	Log Sta. / Surv. Sta.
FRAMING PLAN	
Designed By J. WEAVER	Drawn By S. FUGERE
Checked By J. WEAVER Date 7-7-98	Bridge Design Supervisor J. WEAVER Date 7-7-98
PROJECT NEWFANE	PROJECT NO. BHF 0106 (4) S
I.G.C. Info.	
Bridge Sheet No.	Sheet 6 of 8

BR-6

orig.