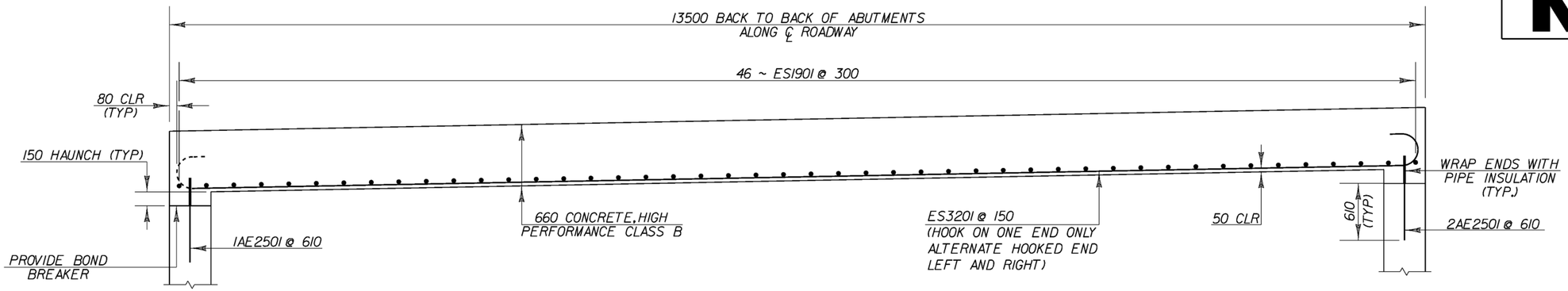


## ELEVATION ALONG ℄ ROADWAY

SCALE: 1:25

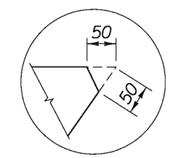


## CHAMFER DETAIL

NOT TO SCALE

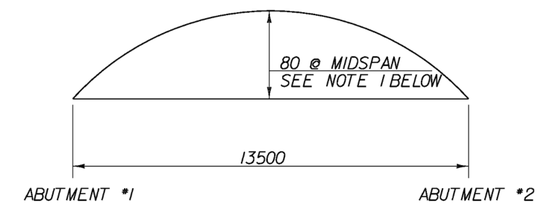


## BRIDGE 19 CAMBER

NTS

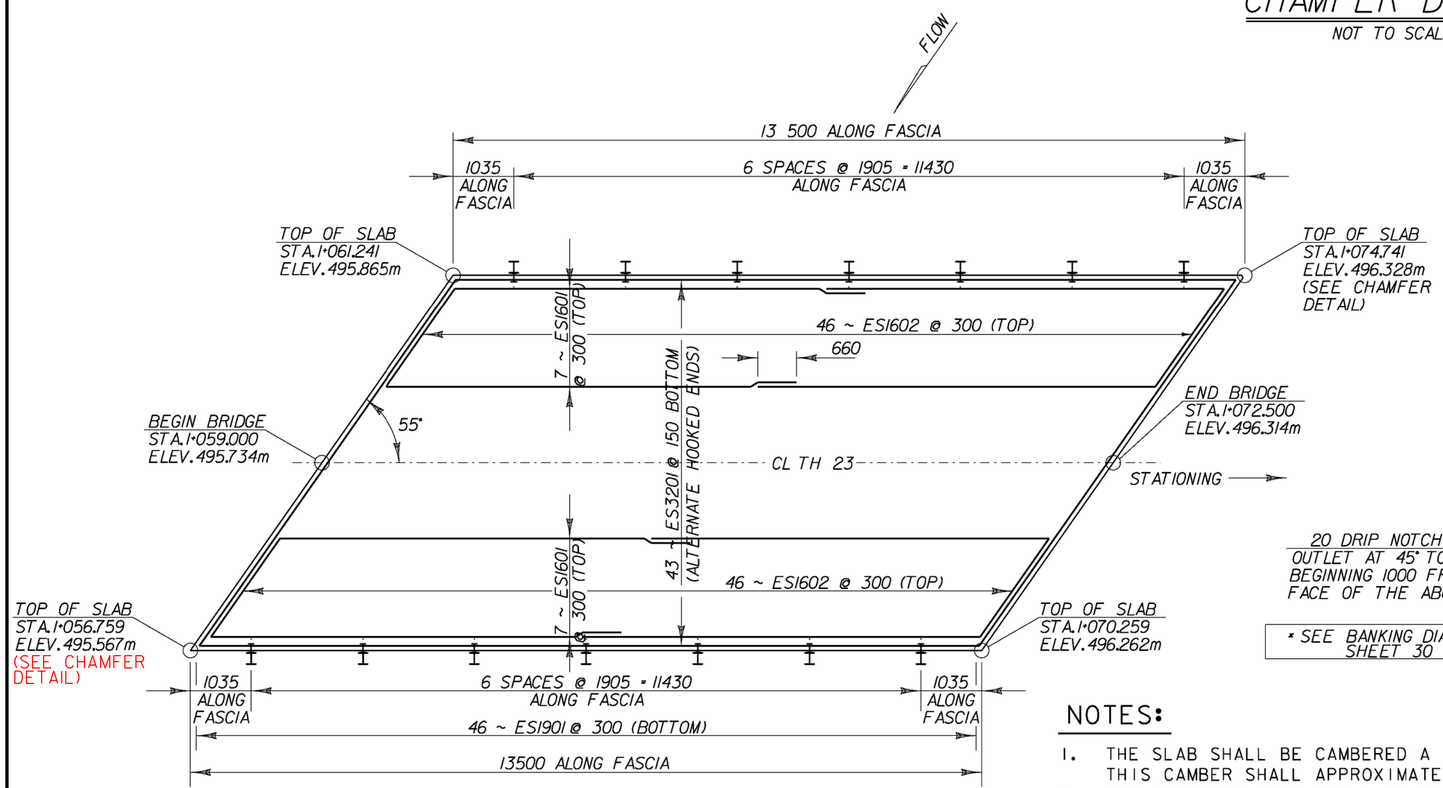


## BRIDGE DECK PLAN

SCALE: 1:50

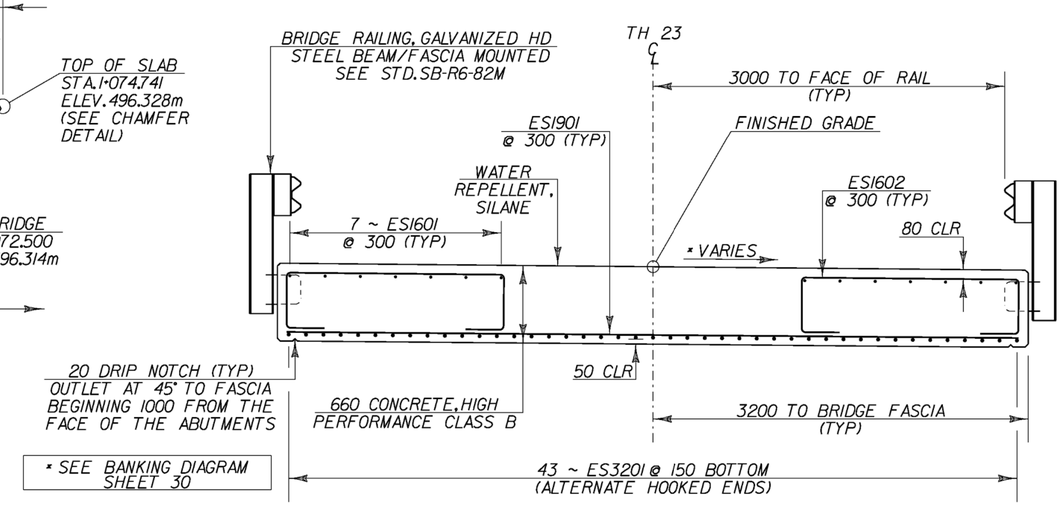


## BRIDGE SECTION

SCALE: 1:25

## NOTES:

1. THE SLAB SHALL BE CAMBERED A TOTAL OF 80mm AT MIDSPAN. THIS CAMBER SHALL APPROXIMATE A CIRCULAR CURVE.
2. THE CONCRETE DECK SHALL BE BROOM FINISHED NORMAL TO CENTERLINE.
3. THE COST OF THE TAR PAPER AND PIPE INSULATION AND THEIR APPLICATIONS SHALL BE INCIDENTAL TO ITEM 501.34 "CONCRETE, HIGH PERFORMANCE CLASS B."
4. THE "E" AND "AE" PREFIX DENOTES EPOXY COATED REINFORCING STEEL.
5. 80mm CLR UNLESS OTHERWISE SPECIFIED ON THE PLANS.
6. ALL LAPS NOT DETAILED SHALL BE 660 (MIN)

BRIDGE 19 SLAB DETAILS

| | |
|---|---|
| PROJECT NAME: CHITTENDEN | |
| PROJECT NUMBER: STP 1443(45) | |
| FILE NAME: /96j236/str/sj236deck.dgn | PLOT DATE: 14-AUG-2009 |
| PROJECT MANAGER: C. CARLSON | DRAWN BY: C. WEEBER |
| DESIGNED BY: K. UPMAL | CHECKED BY: D. PETERSON |
| sj236br19dck.i | SHEET 35 OF 81 |