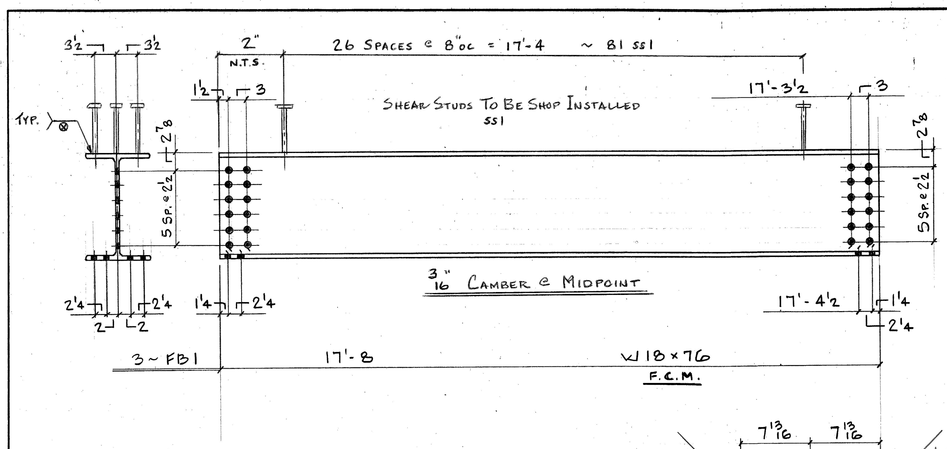

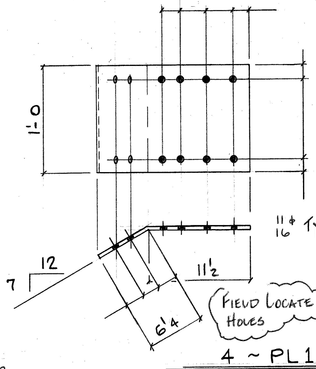

4 ~ PL1

PL 5/16 × 12 × 1'-5 3/4

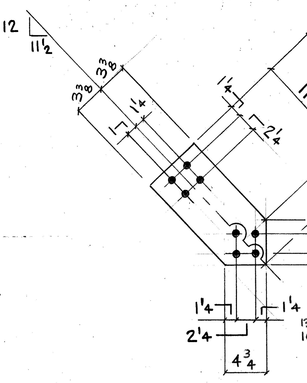

16 ~ FEP1

PL 5/16 × 6 3/4 × 1'-3 1/4

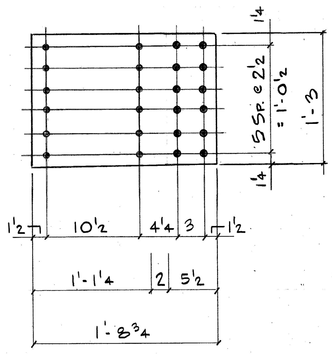

6 ~ FBP1

PL 1/2 × 15 × 1'-8 3/4

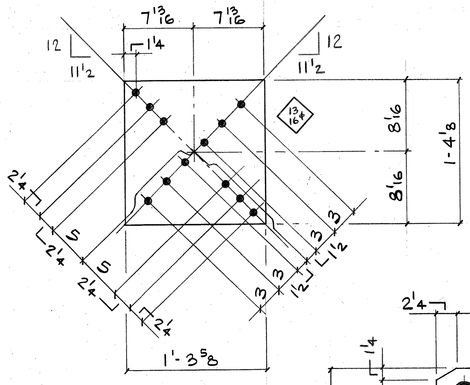

4 ~ SBP1

PL 5/16 × 15 5/8 × 1'-4 8/16

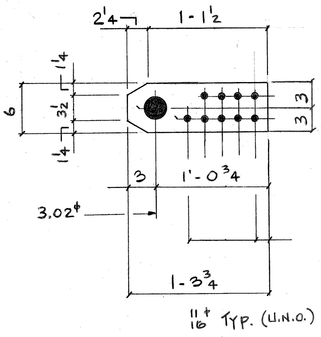

8 ~ PL4

PL 5/8 × 6 × 1'-3 3/4

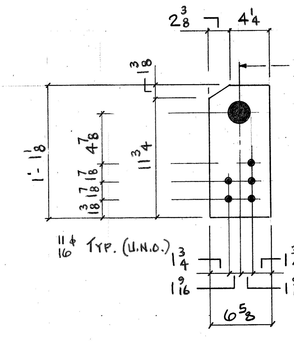

8 ~ PL

PL 3/4 × 6 5/8 ×

The replacement of members EP1, U1-U2, U2-U1', and EP1' necessitates different details than shown on this sheet. See Sheets 10-13 (1/4-4/4) for modifications.

Deck Bracing Moved To Sheet #7

PL4 Field Locate Holes Except Pin Hole Shop Drilled After Galvanizing.

V

CK'D

RES
BY

Notes:

1) Pin holes shall be bored true to the specified diameter, smooth and straight, at right angles with the axis of the member and parallel with each other unless otherwise required. The fina surface shall be produced by a finishing cut.

2) Threads for all bolts and pins for structural steel construction shall conform to the United Standard Series UNC ANSI B1.1, Class 2A for external threads and Class 2B for internal thread except that pin ends having a diameter of 1.375 in. or more shall be threaded six threads to the inch.

3) All eyebars that are to be placed side by side in the structure shall be securely fastened together in the order that they will be placed on the pin and bored at both ends while so clamp

4) The edges of eyebars that lie between the transverse centerline of their pin holes shall be cut simultaneously with two mechanically operated torches abreast of each other, guided by a substantial template, in such a manner as to prevent distortion of the plates. Edges of eyebars shall be smooth and free of any score marks from torch cutting.

5) Grease for pin connections shall be "Never-Seez Mariner's Choice."