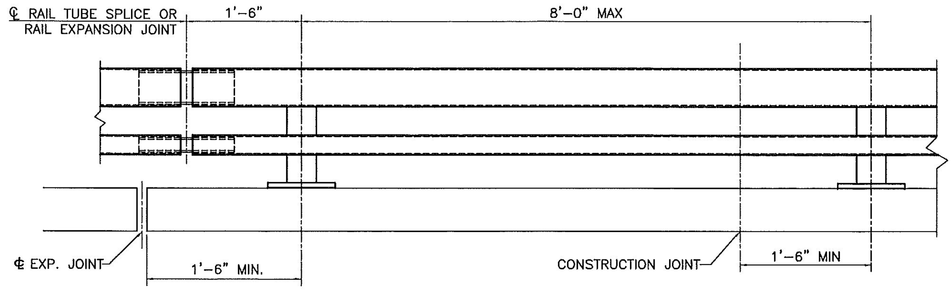

BRIDGE RAILING ELEVATION

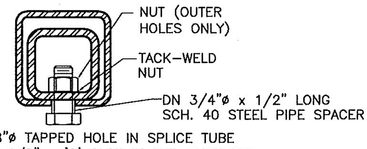

5/8"ø TAPPED HOLE IN SPLICE TUBE AND 1 1/8" x 'C' SLOT IN RAIL TUBE FOR BOLT AND PLAIN HARDENED WASHER

EXPANSION JOINT SECTION

FOR DETAILS NOT SHOWN, SEE "RAIL TUBE SPLICE SECTION."

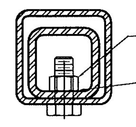

5/8"ø TAPPED HOLE IN SPLIC
3/4"ø HOLE IN RAIL TUBE FO
PLAIN HARDENED WASH

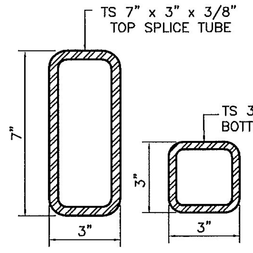

RAIL TUBE SPLICE SEC

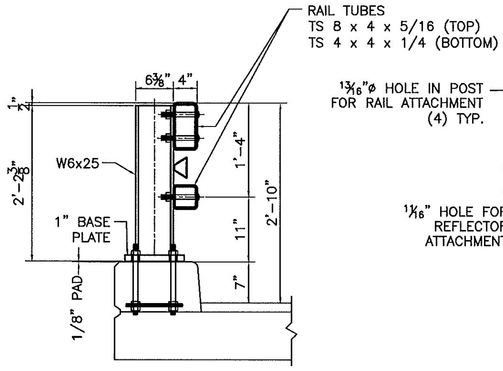

TYPICAL SECTION
(2 – RAIL)

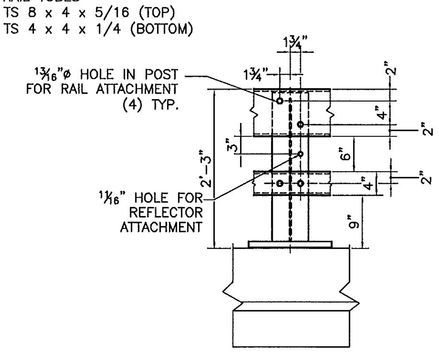

NORT & SOUTH RAIL ELEVATION
(2 – RAIL)

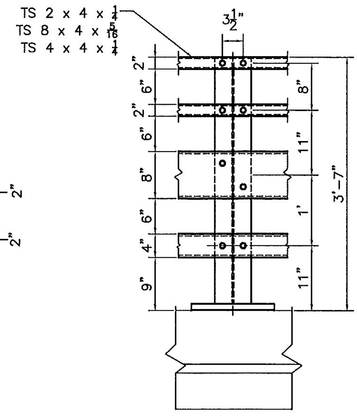

SOUTH RAIL ELEVATION
(4 – RAIL)

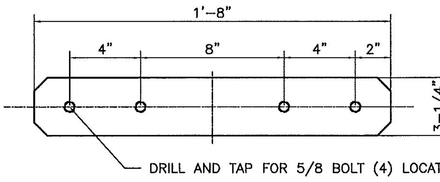

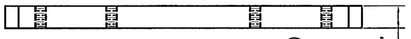

SPLICE BAR DETAIL

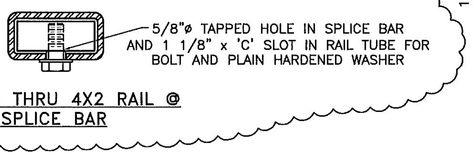

SECTION THRU 4X2 RAIL @ SPLICE BAR

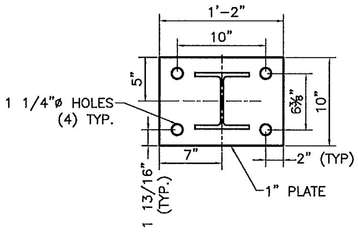

POST AND BASE PLATE

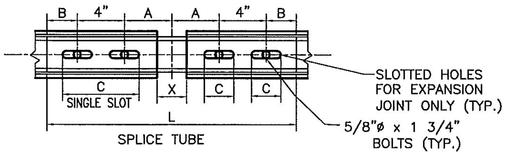

RAIL TUBE SPLICE AND RAIL EXPANSION JOINT DETAIL

SPLICE TABLE					
T	A	B	C	L	X
N/A	4"	2"	---	20"	3/4"
EXPANSION JOINT TABLE					
<4"	4"	2"	2 1/2"	20"	2 1/2"

T = TOTAL MOVEMENT BETWEEN BRIDGE EXPANSION JOINTS. SEE NOTE 5

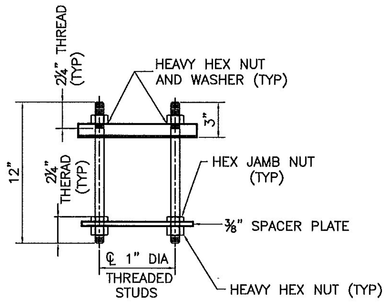

RAIL POST ANCHORAGE
(BY OTHERS)

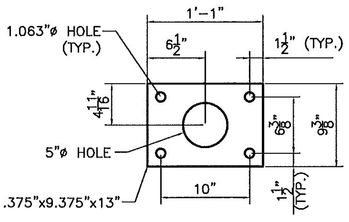

ANCHOR PLATE
(BY OTHERS)

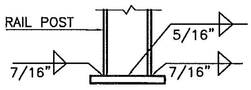

BASE WELD DETAIL

No.	Remarks	Date
2	miscellaneous corrections	06–06–12
1	Per VAOT comments	05–24–12
0	Initial submittal	04–25–12

REVISIONS

Vermont
R E
CK'D BY
1:24
RESUBMIT
BY KMH