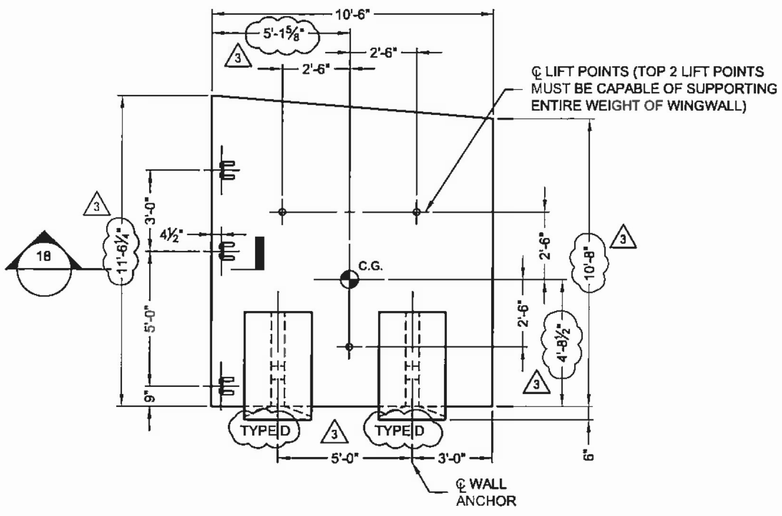

WINGWALL - WW2A

TOTAL WEIGHT = 9.3 TONS 3

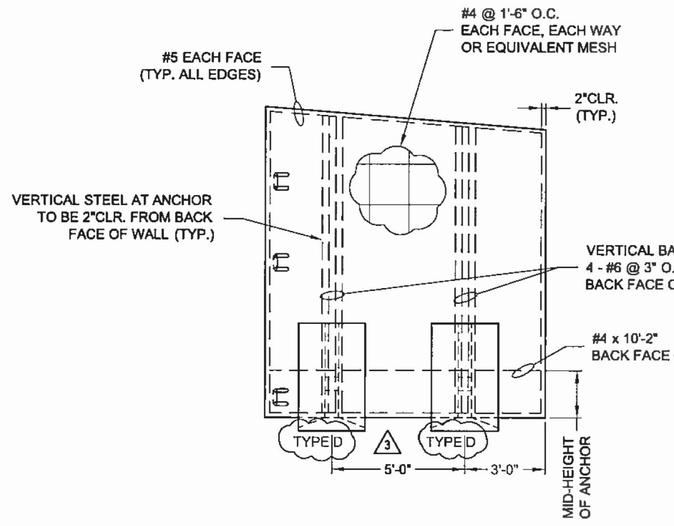

REINFORCING DETAIL - WW2A

(FOR ANCHOR REINFORCING SEE SHEET S25)

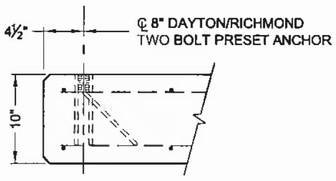

SECTION 18

Vermont Agency of Transportation

RECEIVED

CK'D BY GML OK'D BY TCF

7:13 am, May 03, 2011

RESUBMIT _____ APPROVED X

BY KMH DATE 5-3-11

I:\MERLIN\PROJECTMGT\REV\428000\428035\428035-1-CON_SP\ANDRAW\NGSF\FABRICATION\PRE-428035-001-CS-FAB-F.DWG 5/2/2011 11:47 AM

The design and information shown on this drawing is provided as a service to the project owner, engineer and contractor by CONTECH Construction Products Inc. or one of its affiliated companies (CONTECH). Neither this drawing, nor any part thereof, may be used, reproduced or modified in any manner without the prior written consent of CONTECH. Failure to comply is done at the user's own risk and CONTECH expressly disclaims any liability or responsibility for such use.

If discrepancies between the supplied information upon which the drawing is based and actual field conditions are encountered as site work progresses, these discrepancies must be reported to CONTECH immediately for re-evaluation of the design. CONTECH accepts no liability for designs based on missing, incomplete or inaccurate information supplied by others.

MARK	DATE	REVISION DESCRIPTION	BY
5	4/27/2011	NO CHANGES ON THIS SHEET	RKL
4	4/18/2011	NO CHANGES ON THIS SHEET	RKL
3	4/8/2011	REVISIONS PER REVIEWERS COMMENTS	RKL
2	4/4/11	NO CHANGES ON THIS SHEET	RKL
1	3/10/2011	REVISIONS PER REVIEWERS COMMENTS	RKL

CONTECH® CONSTRUCTION PRODUCTS INC.
www.contech-cpi.com
9025 Centre Pointe Dr., Suite 400, West Chester, OH 45069
800-338-1122 513-645-7000 513-645-7993 FAX

CONSPAN® BRIDGE SYSTEMS

CONTECH FABRICATION DRAWING

HARTFORD TH#
VERMONT AGENCY OF TRAN
HARTFORD,