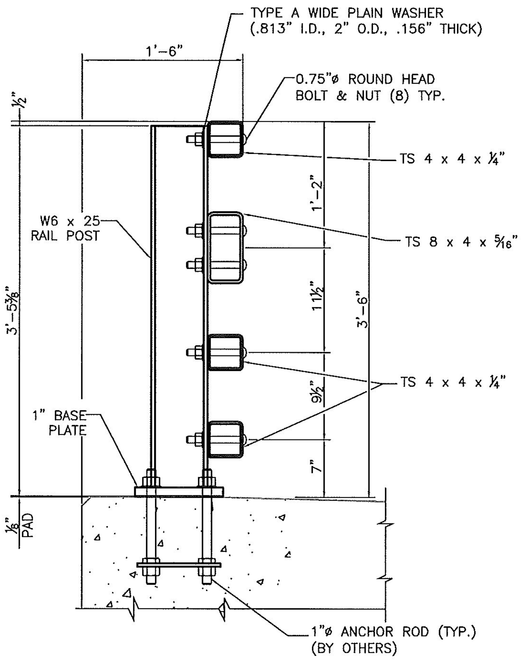

1 SECTION VIEW

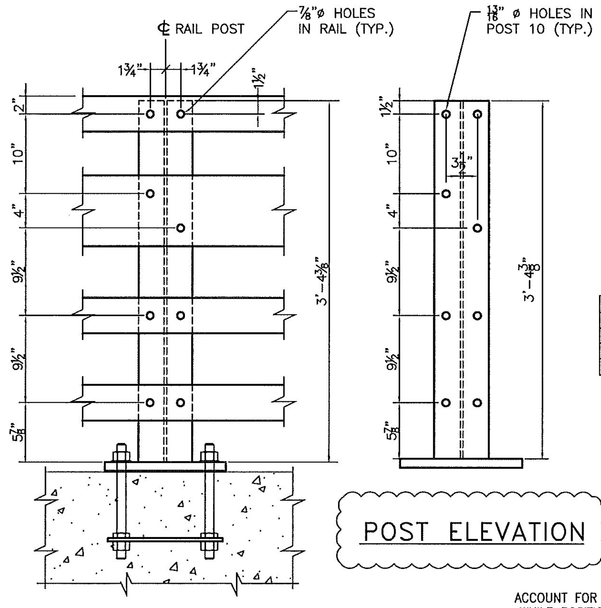

1 PARTIAL RAIL ELEVATION

POST ELEVATION 1

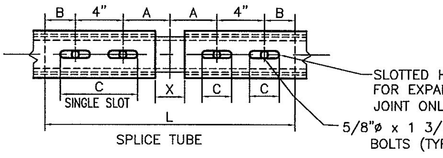

RAIL TUBE SPLICE AND RAIL
EXPANSION JOINT DETAIL

SPLICE TABLE					
T	A	B	C	L	X
N/A	4"	2"	--	20"	3/4"
EXPANSION JOINT TABLE					
<4"	4"	2"	2 1/2"	20"	2 1/2

T = TOTAL MOVEMENT BETWEEN BRIDGE EXPANSION JOINTS. SEE NOTE 5 1

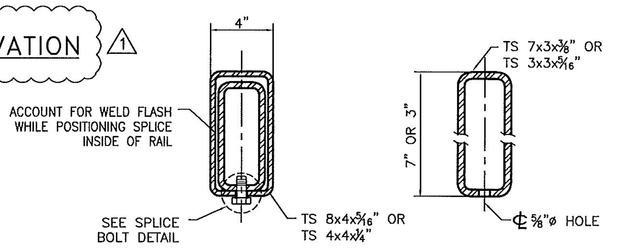

RAIL SPLICE SECTION

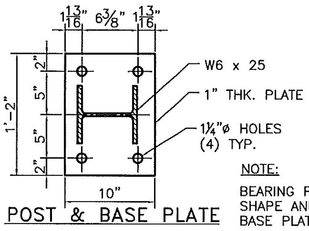

POST & BASE PLATE

NOTE:
BEARING PAD TO HAVE SAME SHAPE AND DIMENSIONS AS BASE PLATE.

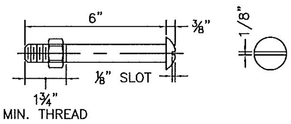

1 3/4" DIA. A449 (TYPE 1)
ROUND HEAD BOLT
(WITH WASHER AND PREVAILING TORQUE TYPE LOCK NUT)
(SEE NOTE #8)
ONLY FULL DIAMETER BODY BOLTS WILL BE ALLOWED.

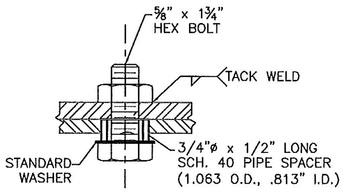

SPLICE BOLT
DETAIL

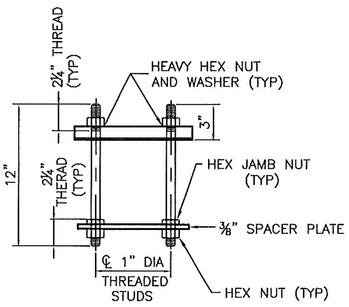

RAIL POST ANCHORAGE
(BY OTHERS)

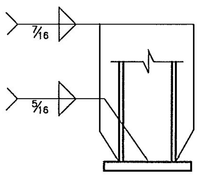

BASE WELD DETAIL

No.	Remarks	Date
1	Per reviewer	06-10-11
0	Initial submittal	12-15-10

REVISIONS

Vermont Agency
RECE
CK'D BY GML
9:00 am, J
RESUBMIT
BY TCF