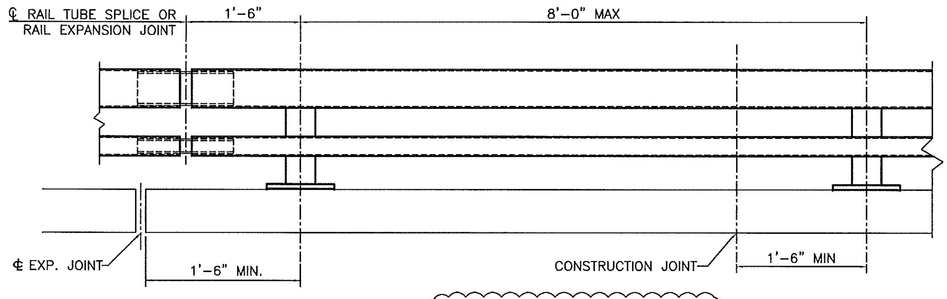

BRIDGE RAILING ELEVATION

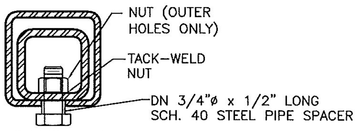

5/8"ø TAPPED HOLE IN SPLICE TUBE
AND 1 1/8" x 'C' SLOT IN RAIL TUBE FOR
BOLT AND PLAIN HARDENED WASHER

EXPANSION JOINT SECTION

FOR DETAILS NOT SHOWN,
SEE "RAIL TUBE SPLICE SECTION."

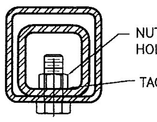

5/8"ø TAPPED HOLE IN SPLICE TU
3/4"ø HOLE IN RAIL TUBE FOR BO
PLAIN HARDENED WASHER

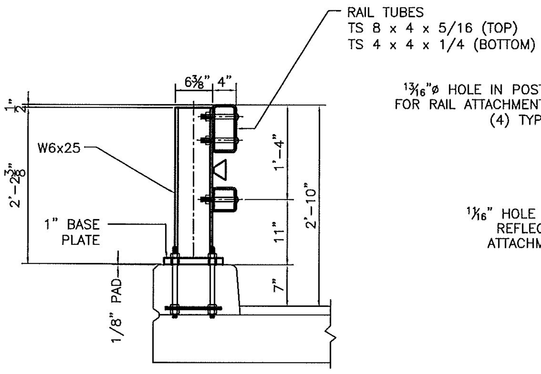

TYPICAL SECTION

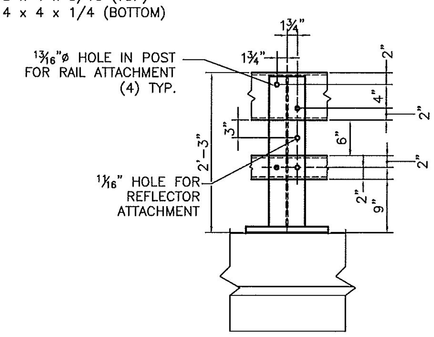

ELEVATION

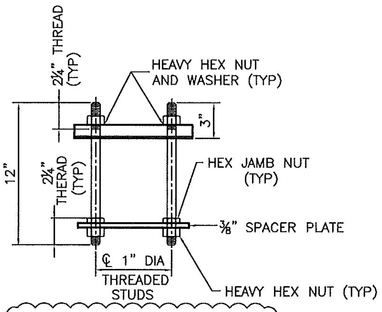

RAIL POST ANCHORAGE
(BY OTHERS)

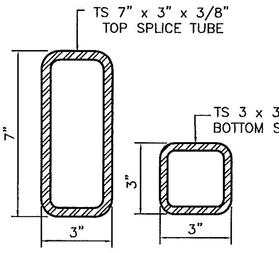

RAIL TUBE SPLICE SECTION

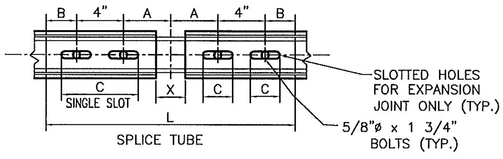

RAIL TUBE SPLICE AND RAIL
EXPANSION JOINT DETAIL

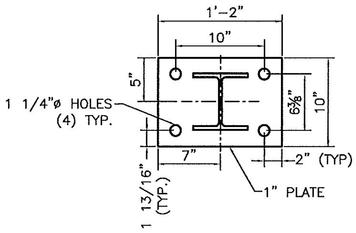

POST AND BASE PLATE

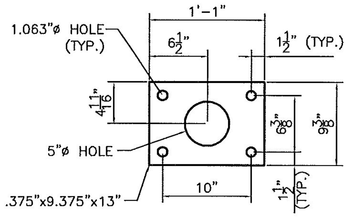

ANCHOR PLATE
(BY OTHERS)

SPLICE TABLE					
T	A	B	C	L	X
N/A	4"	2"	--	20"	3/4"
EXPANSION JOINT TABLE					
<4"	4"	2"	2 1/2"	20"	2 1/2"

T = TOTAL MOVEMENT BETWEEN BRIDGE
EXPANSION JOINTS. SEE NOTE 5

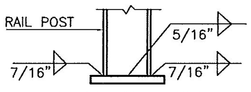

BASE WELD DETAIL

REVISIONS		
No.	Remarks	Date
0	Initial submittal	12-15-10
1	Per reviewer	06-10-11

Vermont Age
REC
CK'D BY GML
9:00 a
RESUBMIT
BY TCF