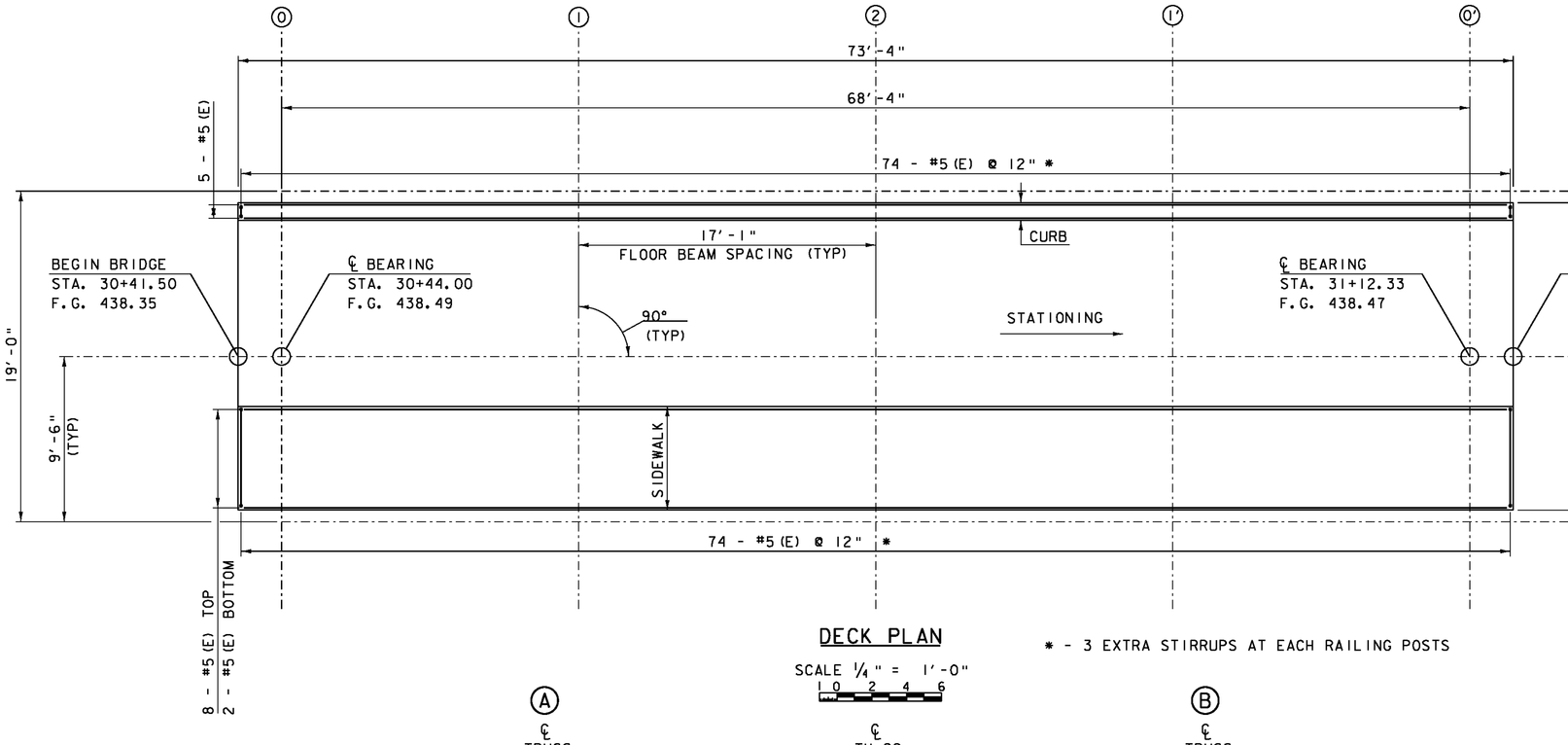

DECK PLAN

SCALE 1/4" = 1'-0"

* - 3 EXTRA STIRRUPS AT EACH RAILING POSTS

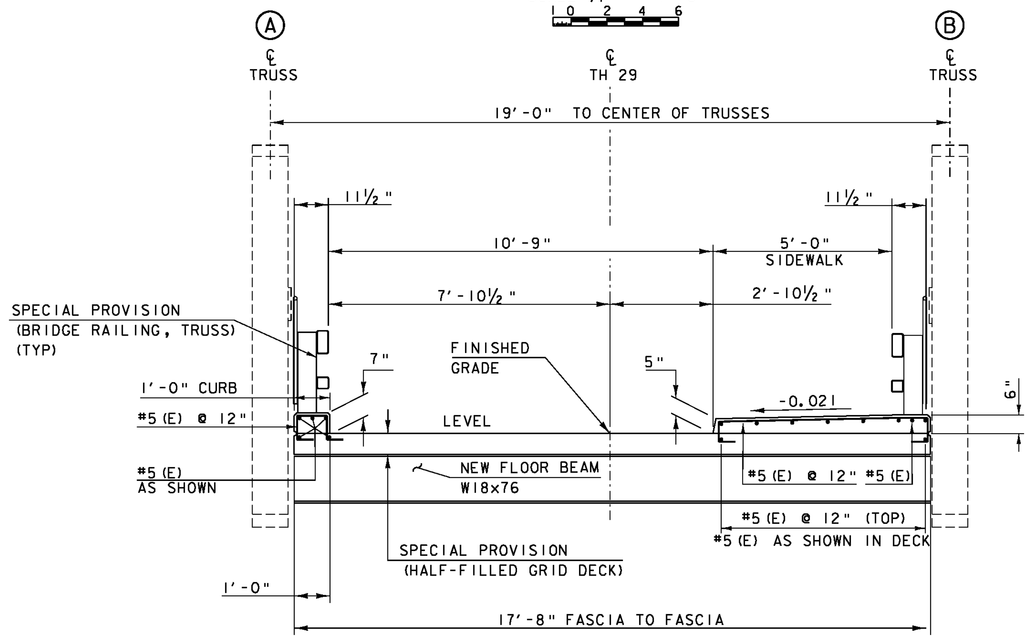

DECK TYPICAL SECTION

SCALE 1/2" = 1'-0"