Notes:

1. REFER TO
SPECIFICA

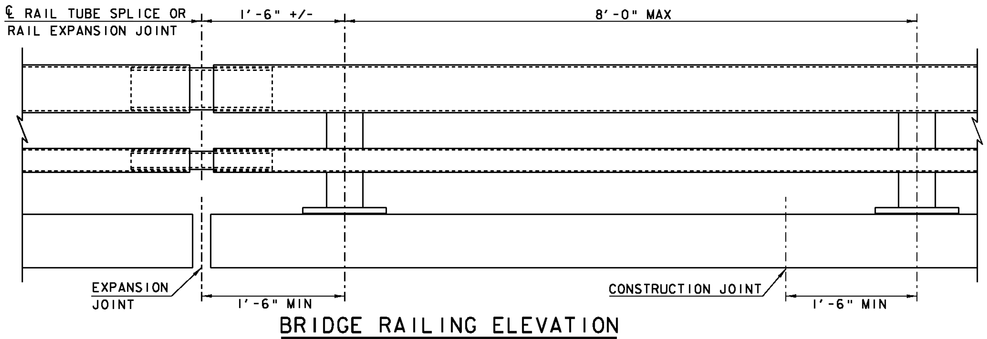

BRIDGE RAILING ELEVATION

(NOT TO SCALE)

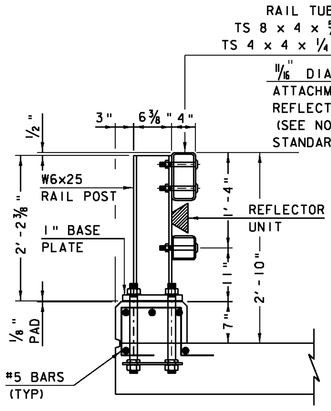

TYPICAL SECTION

SCALE 1" = 1'-0"

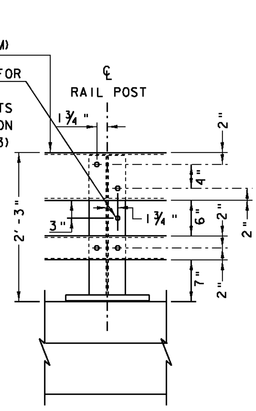

ELEVATION

SCALE 1" = 1'-0"

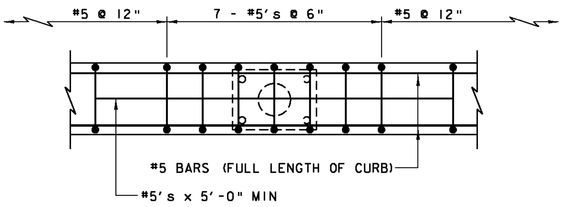

1'-0" CURB REINFORCING PLAN

SCALE 1" = 1'-0"

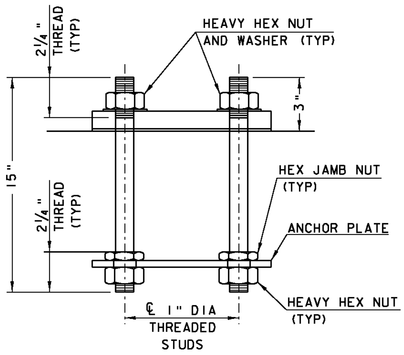

RAIL POST ANCHORAGE

(NOT TO SCALE)