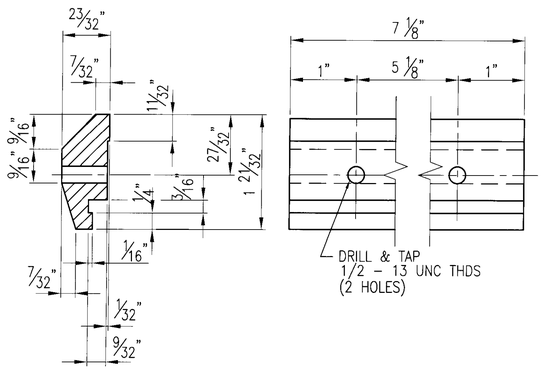

12 ~ REQ'D CLAMP
BAR CB-03-A #19447
(BARRIER RAIL)

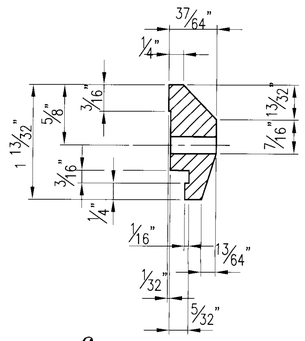

6 ~ REQ'D CLAMP
BAR CB-01-H #28596
(HANDRAIL)

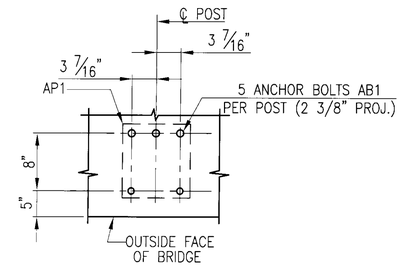

TYPICAL ANCHOR BOLT SETTING

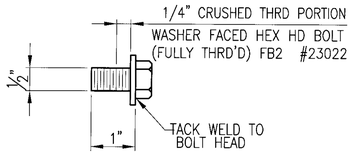

SPLICE BOLT DETAILS

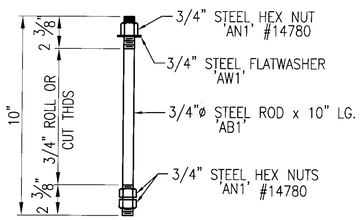

15 ~ REQ'D ANCHOR BOLTS AB1

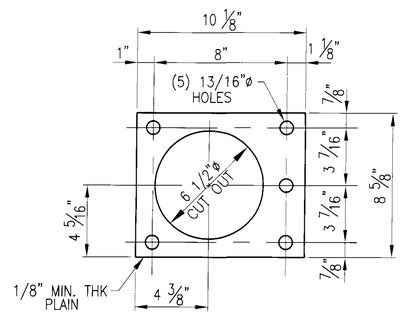

3 ~ REQ'D ANCHOR PLATE AP1
#31286

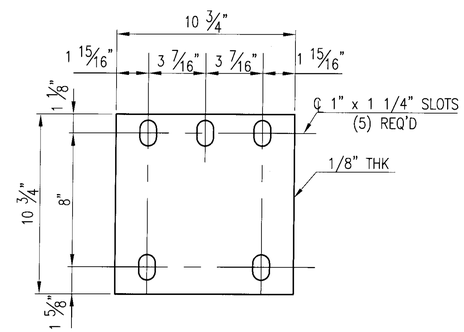

3 ~ REQ'D FABRIC PADS 'EP1'

ANODIZED

● ALL ALUM. COMPONENTS SHALL BE ANODIZED TO A BLACK

REV.	DESCRIPTION	BY	DATE
1	REVISED DWG NO.	CMS	09 12 09

BRIDGE No. 7
PROJECT No. BHF 6000 (15) S
ITEM No: 900.640

APPROVED: _____ REC'D APPROVAL _____ DRAWING _____

L.B. FOSTER COMPANY
1016 GREENTREE ROAD
PITTSBURGH, PENNSYLVANIA 15220

FOR: F. R. LAFAYETTE, INCORPORATED
VERMONT AGENCY OF TRANSPORTATION
CITY OF BARRE, COUNTY OF WASHINGTON
BRIDGE RAILING FOR PROSPECT ST. OVER STEVENS BRANCH
3L ALUM APPROACH RAILING ~ SPECIAL POST DETAILS

MADE CMS DATE 08/11/09 JOB No. AR0569 CUST. No.
CHECK BLJ DATE 08/18/09 DRAWING LB31 REV. No. ONE