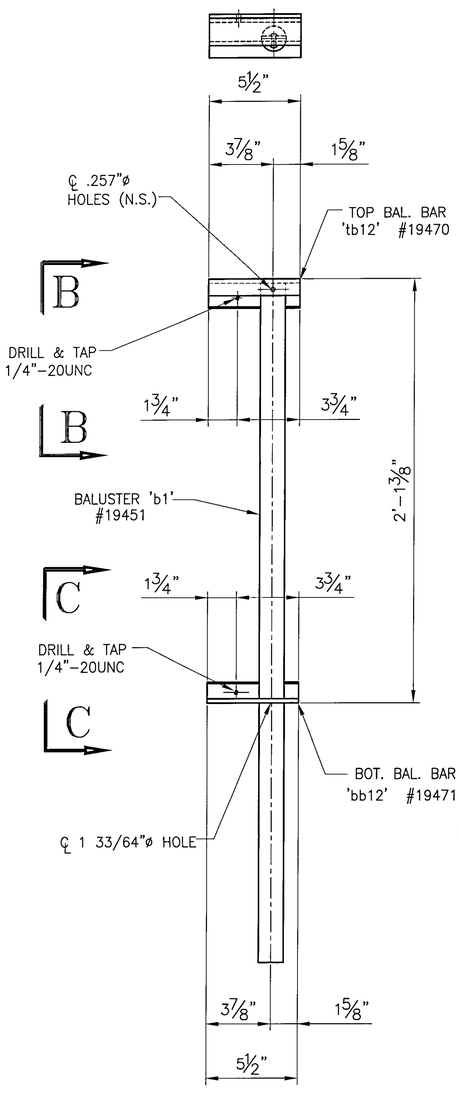

ONE REQ'D. ~ BALUSTER PANEL
ASSEMBLY 'BP12' 1
(REAR VIEW)

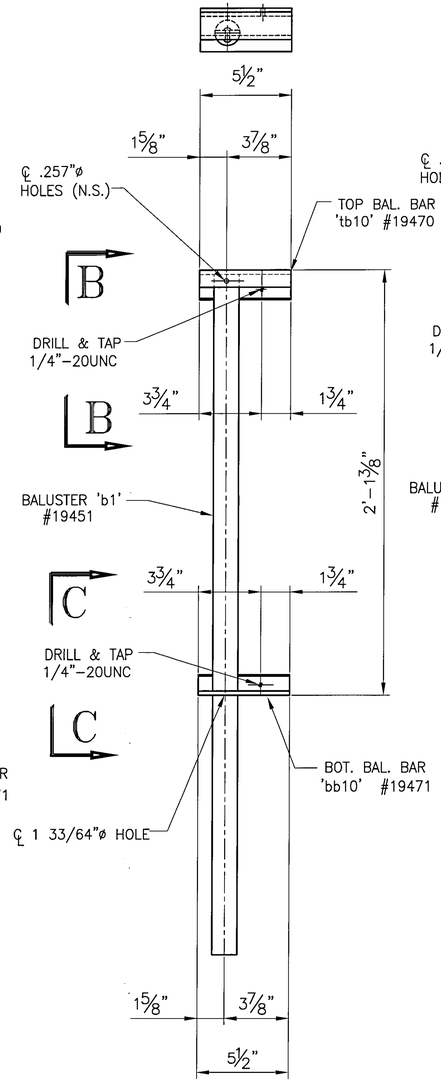

ONE REQ'D. ~ BALUSTER PANEL
1 ASSEMBLY 'BP10'
(REAR VIEW)

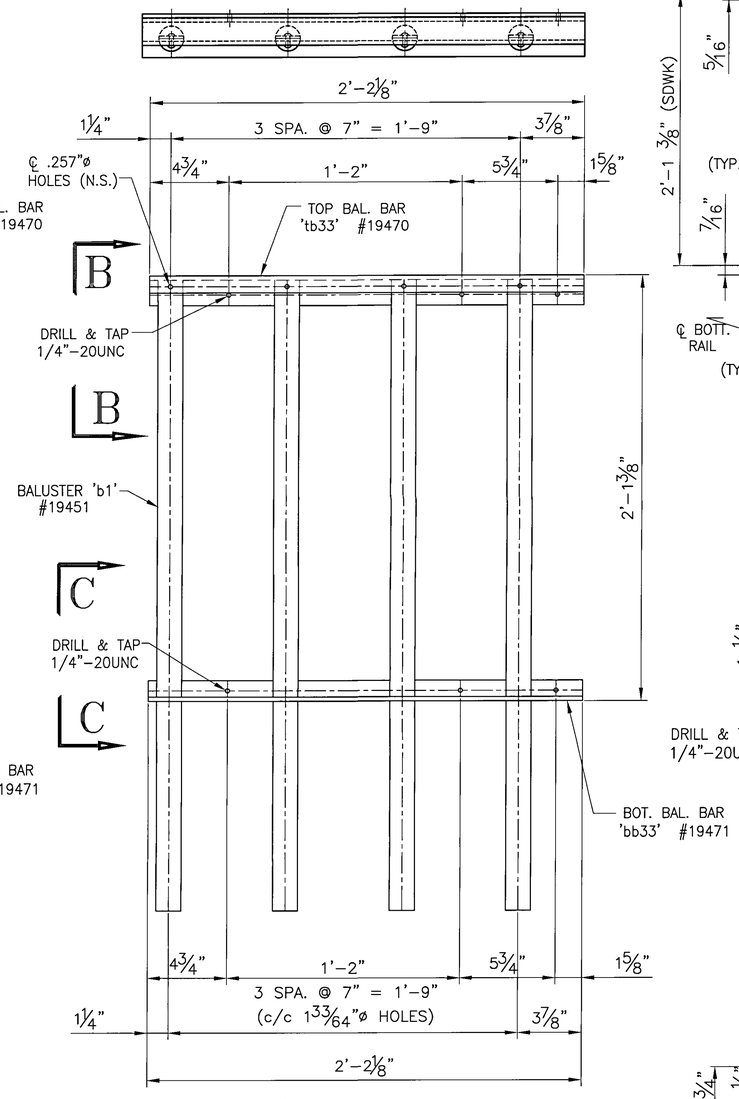

ONE REQ'D. ~ BALUSTER PANEL
1 ASSEMBLY 'BP33'
(REAR VIEW)

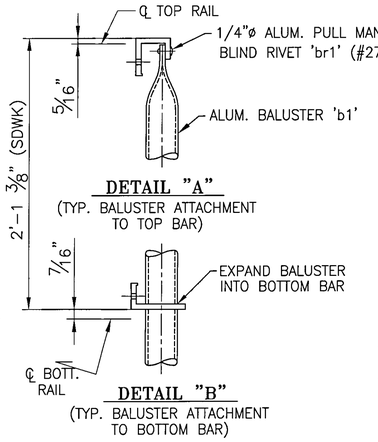

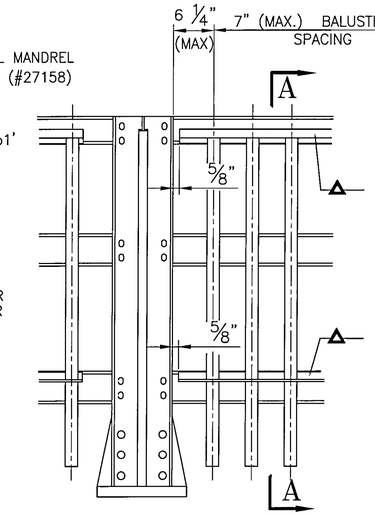

TYPICAL ELEVATION
△ 1/4"–20UNC S.S. SOCKET SET SCREW x 1/2" LG. 'SS1' #22079, SCREW EVERY OTHER SPACE BETWEEN BALUSTERS IF POSSIBLE

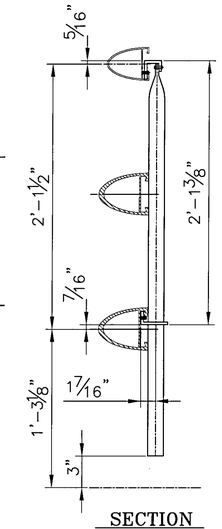

SECTION A–A

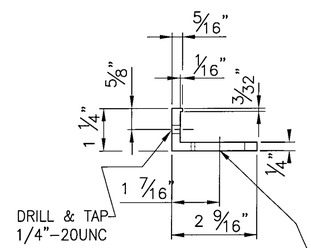

VIEW 'C'–'C'
℄ 1 33/64"ø HOLE

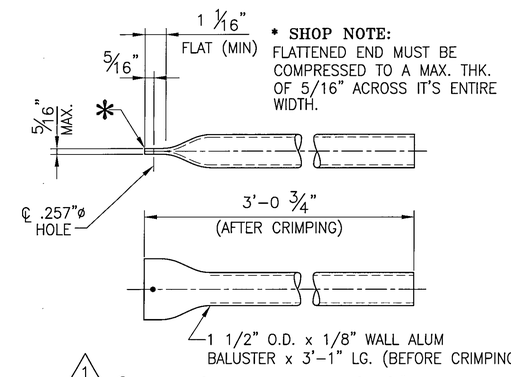

* SHOP NOTE:
FLATTENED END MUST BE COMPRESSED TO A MAX. THK. OF 5/16" ACROSS IT'S ENTIRE WIDTH.

1 6 ~ REQ'D BALUSTERS 'b1' #19451

BALUSTERS WITH 1/8" WALL & T4 TEMPER USED IN LIEU OF 1/16" WALL & T6 TEMPER DUE TO SUPERIOR EXPANDING

NOTE: FOR GEN. NOTES AND TYP. DETAILS SEE DWG LB5
FOR RAILING ELEVATION SEE DWG LB7 – LB9

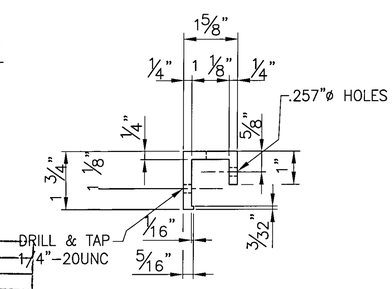

VIEW 'B'–'B'

Accepted ✓
Accepted as Noted
Accepted Noted Resubmit
Rejected, Revise Resubmit
Rejected - Unacceptable

Checking is only for conformance with the design concept of the Project and compliance with the information given in the Contract Documents. The Engineer assumes no liability for errors or omissions that may be contained herein. The Contractor, by approving and submitting these documents, verifies their accuracy as stipulated on the Contractors Shop Drawing Stamp.

Date 9/25/09 DuBOIS AND KING By: ZPD

ANODIZED
(SEE LB5 FOR SPECS.)

REV.	DESCRIPTION	BY	DATE
1	GENERAL REVISION PER APPROVAL COMMENTS	CMS	09 11 09

BRIDGE No. 7
PROJECT No. BHF 6000 (15) S
ITEM No: 900.640

APPROVED: _____ REC'D APPROVAL _____ DRAWING _____

L.B. FOSTER COMPANY
1016 GREENTREE ROAD
PITTSBURGH, PENNSYLVANIA 15220

FOR: F. R. LAFAYETTE, INCORPORATED
VERMONT AGENCY OF TRANSPORTATION
CITY OF BARRE, COUNTY OF WASHINGTON
BRIDGE RAILING FOR PROSPECT ST. OVER STEVENS BRANCH
3L ALUM BRIDGE RAILING ~ BALUSTER PANEL DETAILS

MADE CMS DATE 08/07/09 JOB No. AR0569 CUST. No.
CHECK BLJ DATE 08/17/09 DRAWING LB18 REV. No. ONE