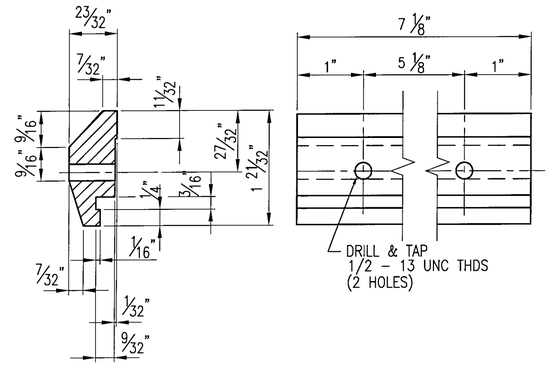

172 ~ REQ'D CLAMP
BAR CB-03-A #19447
(BARRIER RAIL)

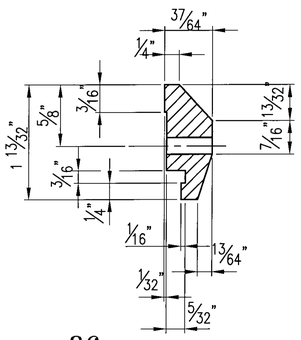

86 ~ REQ'D CLAMP
BAR CB-01-H #28596
(HANDRAIL)

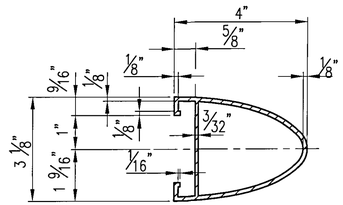

TYPICAL SECTION
(HANDRAIL)

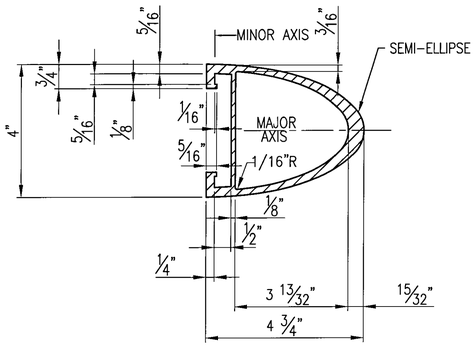

TYPICAL SECTION
(BARRIER RAIL)

ANODIZED

- ALL ALUM. COMPONENTS SHALL BE ANODIZED TO A BLACK (HARD SATIN FINISH) COLOR, FED. STD. COLOR No. 27038. THE ANODIC COATING SHALL BE ARCHITECTURAL CLASS I WITH A MIN. THICKNESS OF 0.7 mils AND A MIN. WEIGHT OF 35 mg/sq in
- ALL VISIBLE STN. STL. HARDWARE SHALL BE FIELD PAINTED BLACK TO MATCH THE ANODIZED RAIL. TOUCH UP PAINT SHALL BE PROVIDED.
- SAMPLES SHALL BE SUBMITTED FOR THE ENGINEER'S APPROVAL.

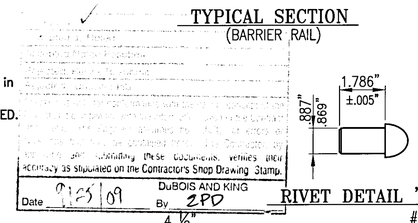

RIVET DETAIL 'rv1'
#19420

GENERAL NOTES

ALL MATERIAL AND WORKMANSHIP SHALL BE IN ACCORDANCE WITH VERMONT AGENCY OF TRANSPORTATION STANDARD SPECIFICATIONS FOR CONSTRUCTION DATED 2006 AND ITS LATEST REVISIONS.

DESCRIPTION	ASTM	ALLOY/GR.	REMARKS
RAILS, POSTS, BASES, SPLICES, CLAMP BARS, PINS, & BALUSTER FRAMES	B221	6061-T6 OR 6351-T5	MIN. YIELD STRENGTH Fy = 35,000 psi.
BALUSTERS	B221	6061 OR 6063	T4 - USED FOR SUPERIOR EXPANDING QUALITIES
RIVETS	B316	6061-T6	BUTTON HD., CONE PT.
SET SCREWS FOR BALUSTERS	F880	TYPE 303	
STAINLESS STEEL BOLTS	A193	GRADE B8	
ANCHOR RODS	A449		GALV. A153
STEEL HEX. NUTS	A563	GRADE DH	GALV. A153
STEEL WASHERS	F436		GALV. A153
ANCHOR PLATES	A569		COMMERCIAL QUALITY (PLAIN)
ALUMINUM WASHERS	B209	2024-T4	
BACKUP PLATE	A36		GALV. A153
END CAPS	B26		356-F
PREFORMED PADS			SECTION 731.01 OR 731.02
ELECTRODES FOR WELDING	AWS A5.10 ER5356		

POSTS TO BE NORMAL TO GRADE AND RAILS SHALL BE PARALLEL TO GRADE.
RAILS TO BE ATTACHED TO A MINIMUM OF THREE POSTS WHEN POSSIBLE.

ALL RAILS AND WELDS TO BE FREE FROM ALL BURRS AND ROUGH EDGES.
ENDS OF TUBE SECTIONS SHALL BE SAWED OR MILLED.
GRIND ALL CUT EDGES SMOOTH.

ALL THREADS TO BE UNC CLASS 2A/2B.

ALL EXTRUSION TOLERANCES NOT SHOWN SHALL BE IN ACCORDANCE WITH ASTM B221.

IF CUT THREADS ARE USED, BOLT DIAMETER SHALL NOT BE LESS THAN NOMINAL DIAMETER. IF ROLLED THREADS ARE USED, BOLT DIAMETER SHALL NOT BE LESS THAN THE ROOT DIAMETER OF THREADS

THE SPLICE BAR SHALL BE ATTACHED TO THE RAIL ELEMENT AS FOLLOWS:
THE RAIL SPLICE AT THE BRIDGE EXPANSION JOINT SHALL BE FASTENED ON BOTH SIDES OF THE RAIL SPLICE USING THE FULLY THREADED WASHER FACED BOLTS, TIGHTENED SECURELY TO THE END OF THREADS, AND LEAVING A 1/8" GAP, THIS ALLOWS EXPANSION ON BOTH SIDES OF THE JOINT.

ALL NUTS SHALL COMPLY WITH AMERICAN HEXAGON ANSI SPECIFICATIONS B18.2

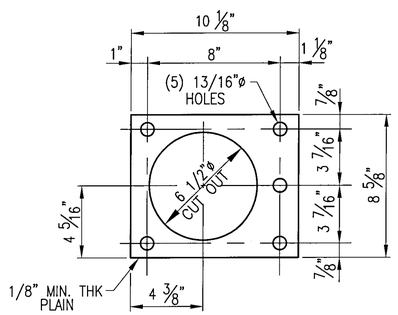

38 ~ REQ'D ANCHOR PLATE AP1
#31286

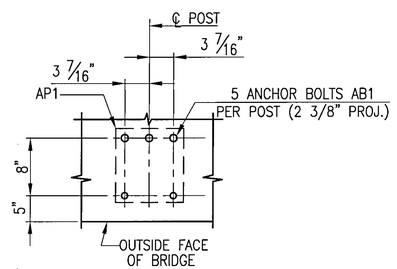

TYPICAL ANCHOR BOLT SETTING

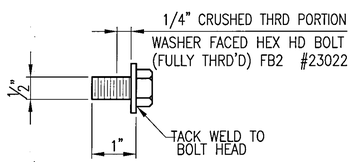

SPLICE BOLT DETAILS

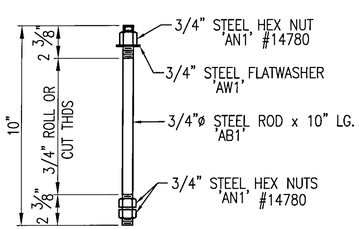

190 ~ REQ'D ANCHOR BOLTS AB1

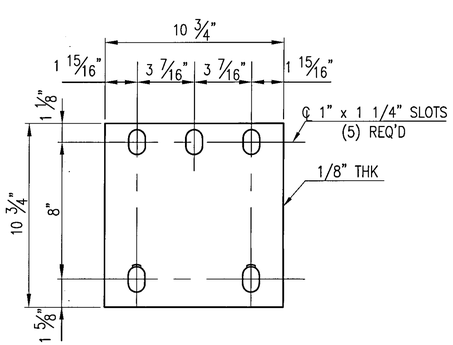

38 ~ REQ'D FABRIC PADS 'EP1'

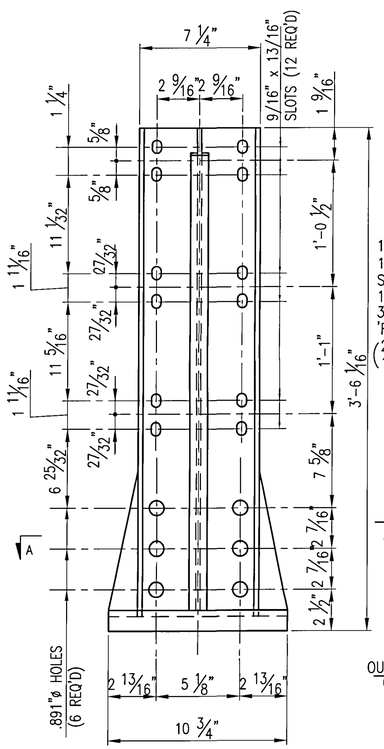

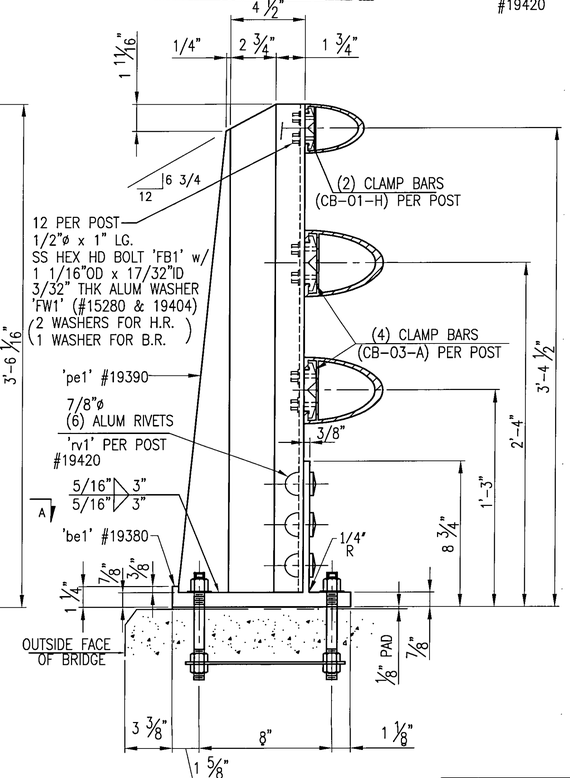

38 ~ REQ'D FABRICATED RAIL POSTS P-301-K
(SIDEWALK)

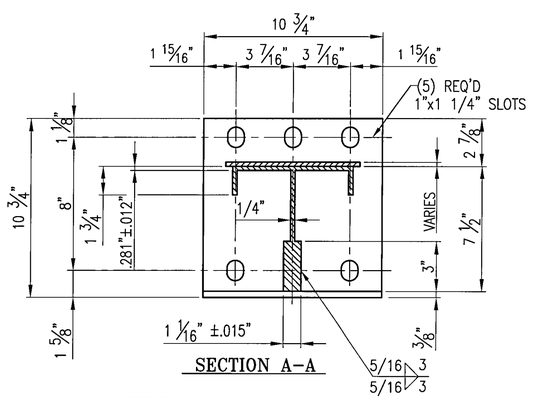

SECTION A-A

BRIDGE No. 7
PROJECT No. BHF 6000 (15) S
ITEM No: 900.640

APPROVED: _____ REC'D APPROVAL _____ DRAWING _____

L.B. FOSTER COMPANY
1016 GREENTREE ROAD
PITTSBURGH, PENNSYLVANIA 15220

FOR: F. R. LAFAYETTE, INCORPORATED
VERMONT AGENCY OF TRANSPORTATION
CITY OF BARRE, COUNTY OF WASHINGTON
BRIDGE RAILING FOR PROSPECT ST. OVER STEVENS BRANCH
3L ALUM BRIDGE RAILING ~ GENERAL NOTES & TYP. DETAILS

MADE CMS DATE 06/29/09 JOB No. AR0569 CUST. No.
CHECK BLJ DATE 08/14/09 DRAWING LB5 REV. No.

REV.	DESCRIPTION	BY	DATE