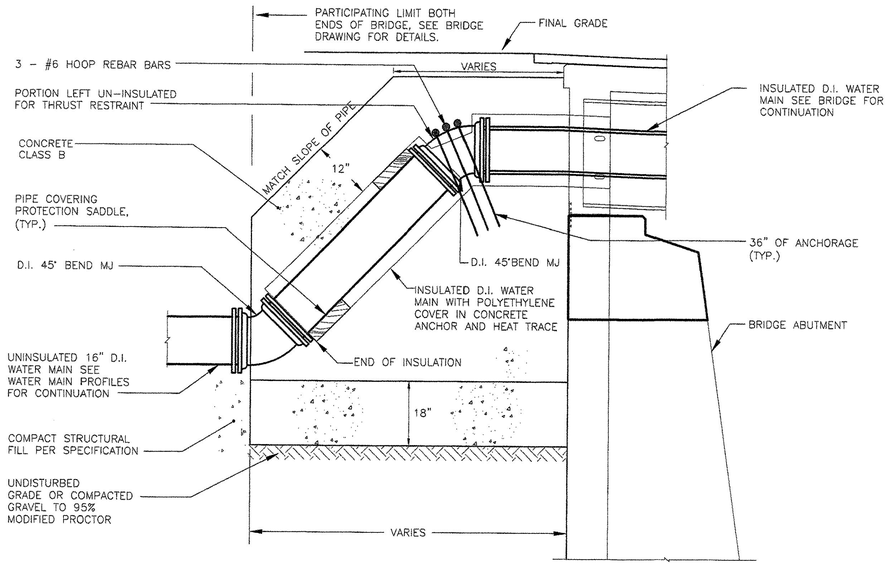

TYPICAL PIPE ANCHOR DETAIL
NOT TO SCALE

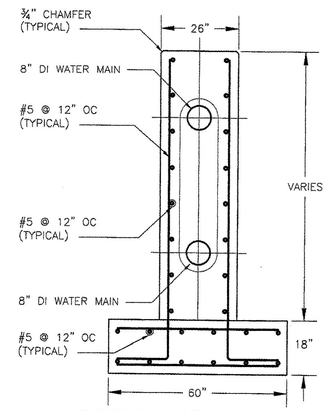

PIPE ANCHOR SECTION FOR 8" WATER MAIN
NOT TO SCALE

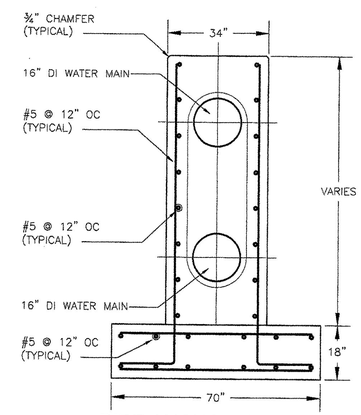

PIPE ANCHOR SECTION FOR 16" WATER MAIN
NOT TO SCALE

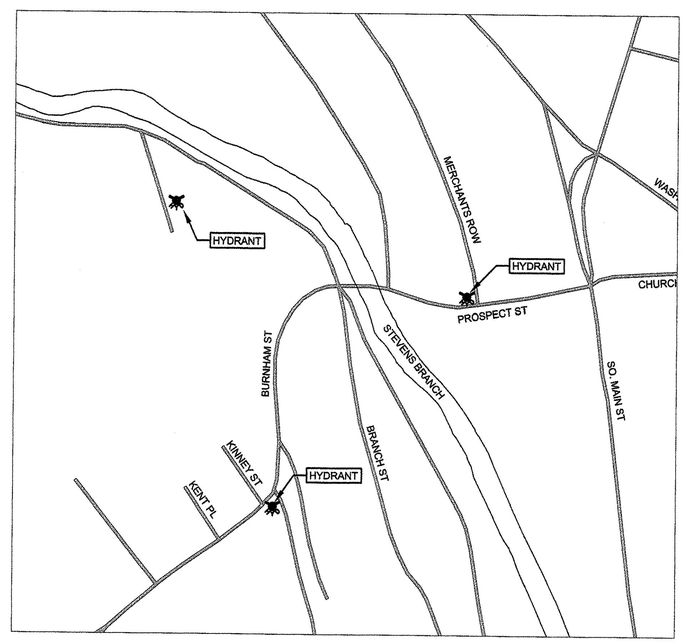

HYDRANT LOCATIONS FOR TEMPORARY WATER
NOT TO SCALE

DUFRESNE & ASSOCIATES, PC
54 Main Street, P.O. Box B
Windsor, Vermont 05089
E-mail: dufresnea@vermontel.net
Web: www.dufresneassociates.com
Windsor, VT • Tel: (802) 674-2004 Fax: (802) 674-2913
Barre, VT • Tel: (802) 479-3698 Fax: (802) 479-2261
St. Johnsbury, VT • Tel: (802) 748-8505 Fax: (802) 748-4512

STATE OF VERMONT — RICHARD E. DUFRESNE — NO. 3834 — CIVIL — LICENSED PROFESSIONAL ENGINEER

1-29-09

REVISIONS

DATE	COMMENTS	BY
1/29/09	FINAL REVIEW COMMENTS	BLB

THIS DRAWING SHALL NOT BE REUSED OR ALTERED IN ANY WAY WITHOUT THE WRITTEN APPROVAL AND AUTHORITY OF R.E. DUFRESNE & ASSOCIATES, PC, WHO OWNS THE COPYRIGHT, PLANS, & WRITTEN DOCUMENTS. © R.E. DUFRESNE & ASSOCIATES, PC

PROSPECT STREET OVER STEVENS BRANCH

WATER MAIN DETAIL SHEET

BARRE, VERMONT

Project #	416008
Project Mgr.	R.N. GOODWIN
Design by	R.N. GOODWIN
Drawn by	GLW
Reviewed by	R.E. DUFRESNE
Approved by	R.E. DUFRESNE
Date	JANUARY 29, 2009
Scale	AS SHOWN

C4

FILE: P:\416008-PROSPECT STREET BRIDGE CROSSING\CIVIL\416008-C4.dwg Jan 30, 2009 - 12:42pm