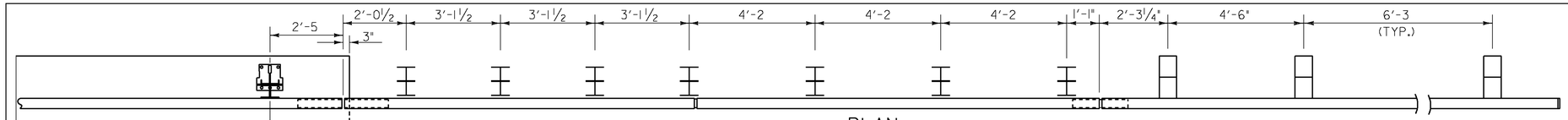

PLAN NOTE: REFER TO SHEET 38 FOR APPROACH RAILING LAYOUT

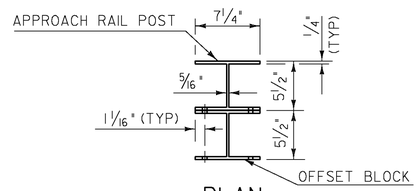

PLAN

ALUMINUM APPROACH RAIL

POST NO.	RAIL HEIGHT DIMENSIONS			OFFSET BLOCK DIMENSIONS			
	A	B	C	D	E	F	G
1	4'-2"	3'-3"	2'-2 3/8"	11 1/2"	1'-0 5/8"	1'-0 5/8"	1'-5 5/8"
2	3'-10 3/4"	3'-1 3/8"	2'-1 1/4"	9 7/8"	1'-0"	1'-0"	1'-5"
3	3'-7 1/2"	2'-11 3/4"	2'-0 1/4"	8 1/4"	11 1/2"	11 1/2"	1'-4 1/2"
4	3'-4 1/4"	2'-10 1/8"	1'-11 1/4"	6 5/8"	10 7/8"	10 7/8"	1'-3 7/8"
5		2'-7 7/8"	1'-9 7/8"		10 1/8"	10 1/8"	1'-3 1/8"
6		2'-5 3/4"	1'-8 1/2"		9 1/4"	9 1/4"	1'-2 1/4"
7		2'-3 5/8"	1'-7"		8 1/2"	8 1/2"	1'-1 1/2"

ALL REMAINING POSTS TO HAVE THE SAME DIMENSIONS AS POST NO. 7

NOTES

1. POST 1 THROUGH 7 SHALL BE EXTRUDED ALUMINUM.
2. ALL STRUCTURAL STEEL SHALL BE AASHTO M270 GRADE 36 GALVANIZED AFTER FABRICATION.
3. ALL ITEMS NOT OTHERWISE INDICATED SHALL MEET THE SPECIFICATION REQUIREMENTS OF THE STANDARD SHEETS ON WHICH THEY ARE DETAILED.
4. SEE STANDARD G-1 FOR STEEL BEAM GUARD RAIL DETAILS. SEE SHEETS 39 AND 40 FOR ALUMINUM BRIDGE RAILING DETAILS.
5. THE COST OF ALL MATERIALS AND LABOR FOR THE SPLICE BETWEEN THE ALUMINUM APPROACH RAILING AND THE STEEL BEAM GUARD RAIL SHALL BE INCIDENTAL TO ITEM 900.640, "SPECIAL PROVISION (ALUMINUM APPROACH RAILING, ANODIZED)".
6. DETAILS ARE SHOWN FOR TRANSITION TO A 3 RAIL ALUMINUM BRIDGE RAILING.
7. DIMENSIONS SHOWN ARE FROM A REFERENCE LINE AT THE FACE OF POST FOR A NORMAL CROWNED SECTION. APPROPRIATE CORRECTIONS SHALL BE MADE FOR CROSS SLOPES OTHER THAN A NORMAL SECTION.

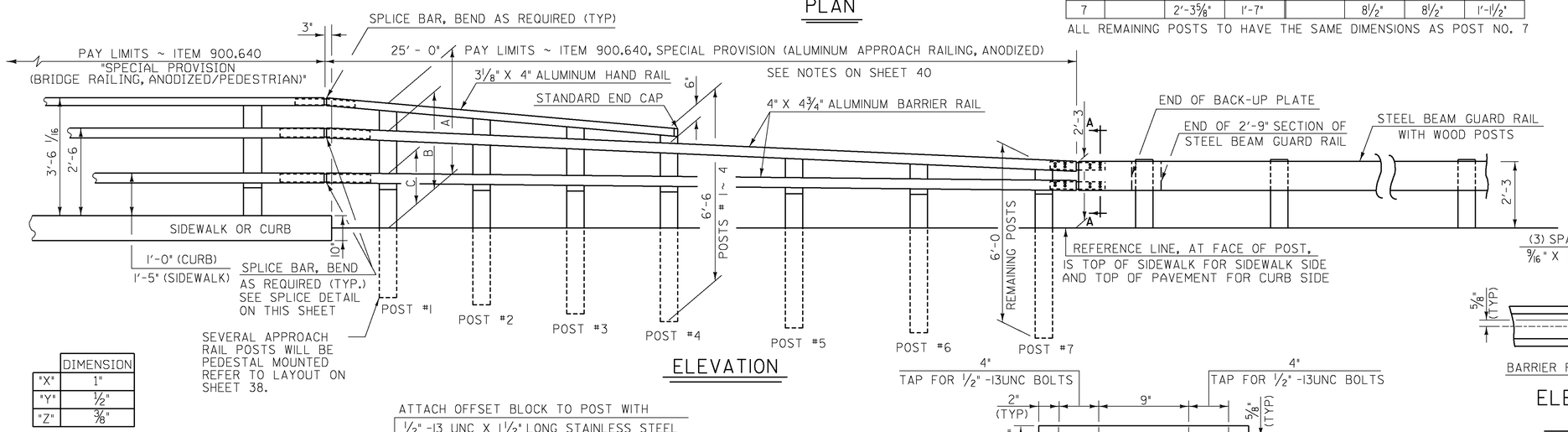

ELEVATION

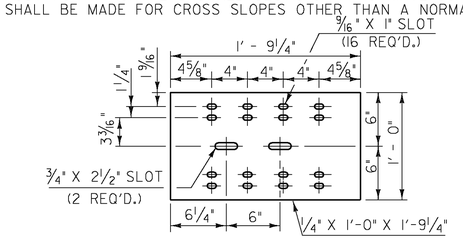

BACK-UP PLATE DETAILS

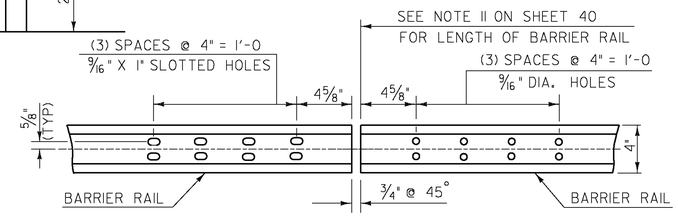

ELEVATION OF BARRIER RAIL (FROM BACK)
AT ALL INTERMEDIATE RAIL SPLICES

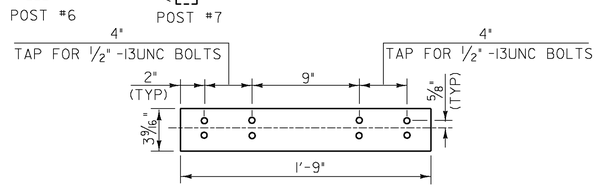

ELEVATION OF BARRIER RAIL SPLICE BAR
TO BE USED AT TRANSITION BETWEEN
APPROACH RAIL & GUARD RAIL (FROM BACK)

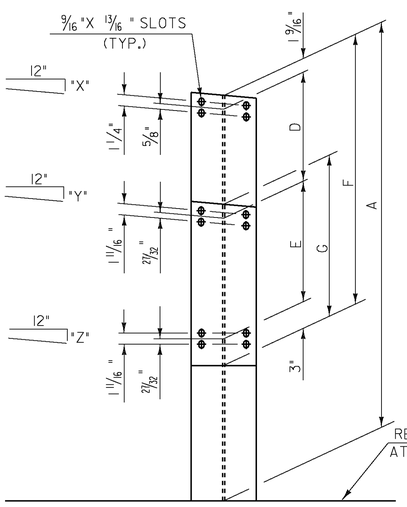

FRONT ELEVATION

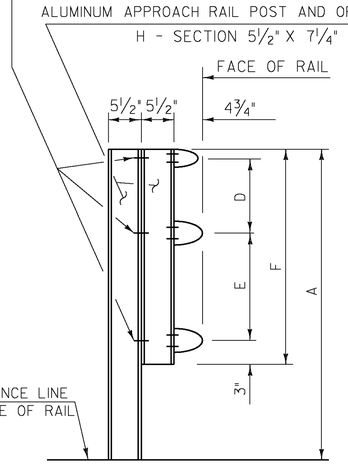

SIDE ELEVATION

APPROACH RAIL DETAILS

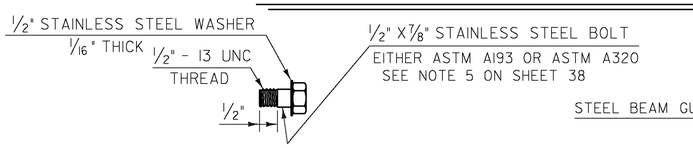

STAINLESS STEEL BOLT DETAILS

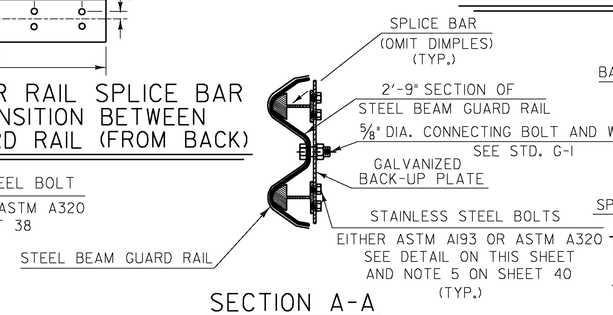

SECTION A-A

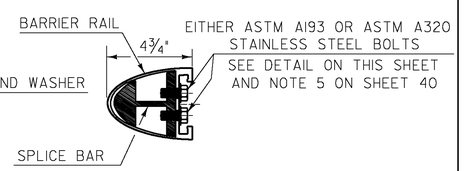

TYPICAL SECTION THROUGH
BARRIER RAIL SPLICE

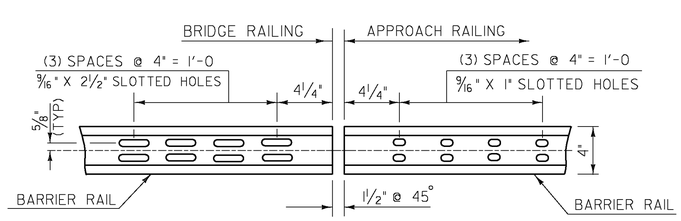

ELEVATION OF BARRIER RAIL (FROM BACK)

PLOTTED 2/11/2009

DuBois & King inc.
engineering planning management development

STATE OF VERMONT
AGENCY OF TRANSPORTATION

Town Of BARRE CITY		Bridge No. 7
Highway No. PROSPECT ST.		Log Sta. / Surv. Sta.
PROSPECT ST. OVER STEVENS BRANCH		
BRIDGE AND APPROACH RAILING DETAILS (3)		
Designed By A. P. GUYETTE	Drawn By S. J. BIJOLLE	
Checked By E. P. DETRICK Date 1/09	Bridge Design Supervisor J. W. TUCKER Date 1/09	
PROJECT BARRE CITY		PROJECT NO. BHF 6000 (15) S
I.G.C. Info.		
Bridge Sheet No.	Sheet 41 of 56	

I:\R16410\DGN\z95j302brail.dgn 2/11/2009 1:06:19 PM