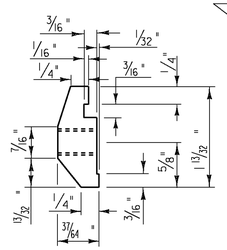

POST CONNECTION HAND RAIL SECTION

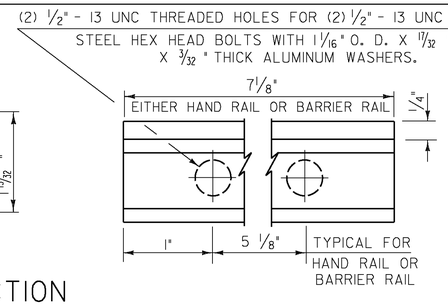

POST CONNECTION ELEVATION

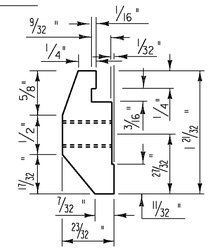

POST CONNECTION BARRIER RAIL SECTION

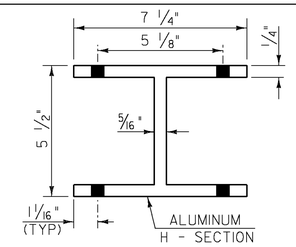

PLAN VIEW OF OFFSET BLOCK

(TO BE USED ON SUPERSTRUCTURE ON CURB SIDE)

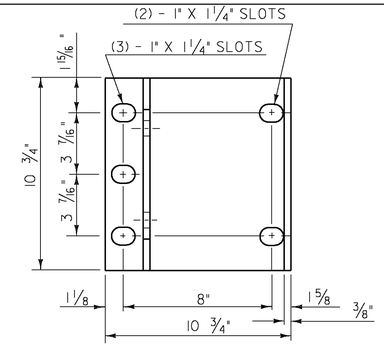

POST BASE PLAN

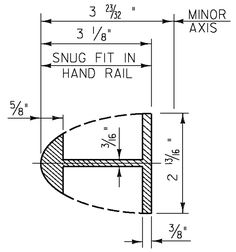

HAND RAIL SPLICE SECTION

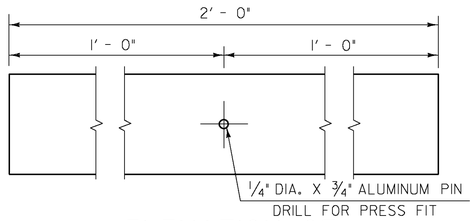

ELEVATION OF HAND RAIL SPLICE BAR

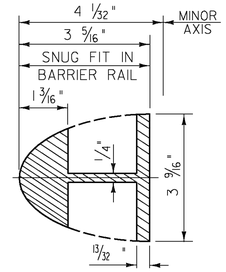

BARRIER RAIL SPLICE SECTION

(SEE SHEET 41 FOR ELEVATION OF BARRIER RAIL SPLICE BAR)

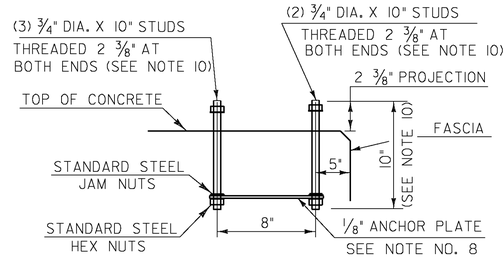

POST ANCHOR ASSEMBLY

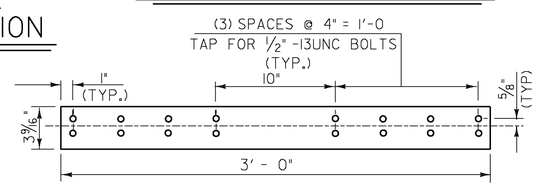

ELEVATION OF STD. BARRIER RAIL SPLICE BAR

(FROM BACK)

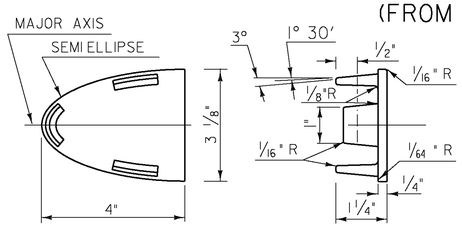

HAND RAIL END CAP

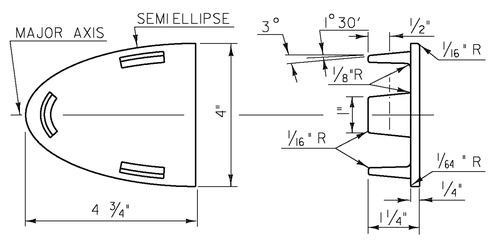

BARRIER RAIL END CAP

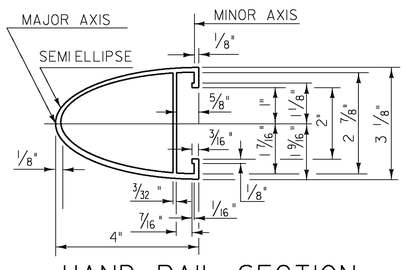

HAND RAIL SECTION

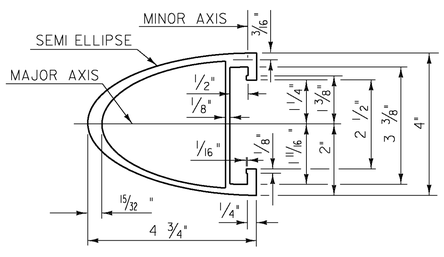

BARRIER RAIL SECTION

(SEE SHEET 41 FOR ELEVATION OF BARRIER RAIL)

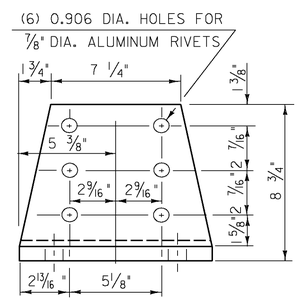

POST BASE FRONT ELEVATION

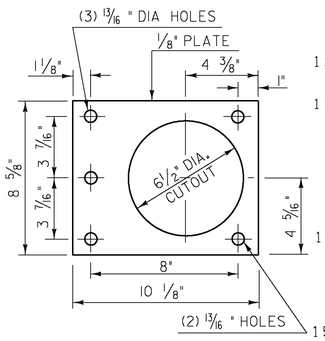

ANCHOR PLATE

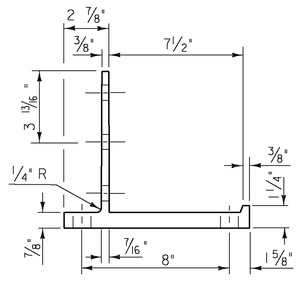

POST BASE SECTION

NOTES

1. ANCHOR BOLTS, WASHERS AND HEAVY HEX NUTS MAY BE ANY OF THE FOLLOWING:
   A. ASTM A449 GALVANIZED, OR
   B. AASHTO M164 (ASTM A325) GALVANIZED
   C. BOLTS AND WASHERS OF STAINLESS STEEL ASTM A276, TYPE 304 (MINIMUM ULTIMATE STRENGTH OF 100,000 PSI) WITH STAINLESS STEEL NUTS OF ASTM A194, GRADE 8NA.
2. ALUMINUM POSTS, POST BASES, SPLICE BARS, CONNECTION BARS, RAILS AND BALUSTER FRAMES SHALL CONFORM TO ASTM B221 ALLOY 6061-T6 OR ALLOY 6351-T5. MINIMUM ALLOWABLE STRESS F_y = 35,000 PSI.
3. ALUMINUM BALUSTER TUBES SHALL CONFORM TO ASTM B210 ALLOY 6061-T5 OR 6063-T5.
4. ALUMINUM RAIL END CAPS SHALL CONFORM TO ASTM B26 ALLOY 356-T6.
5. THE POST, RAIL, AND OFFSET BLOCK CONNECTION BOLTS SHALL BE EITHER ASTM A193 OR ASTM A320. EITHER ONE SHALL BE CLASS 1, B8 GRADE AISI 304 WITH AN ULTIMATE TENSILE STRENGTH OF 75,000 PSI. NUTS FOR EITHER OF THE ABOVE BOLTS SHALL BE ASTM A194, GRADE 8, STAINLESS STEEL WITH AN ULTIMATE TENSILE STRENGTH OF 75,000 PSI.
6. SET SCREWS FOR ATTACHING BALUSTERS TO RAILING SHALL BE ASTM F880, TYPE 303 MATERIAL.
7. RIVETS SHALL BE COLD DRIVEN HIGH BUTTON HEAD "CONE POINT", CONFORMING TO ASTM B316 ALLOY 6061-T6.
8. THE ANCHOR PLATE FOR THE POST ANCHOR ASSEMBLY SHALL BE ASTM A36 STRUCTURAL STEEL.
9. WELDING SHALL CONFORM TO THE REQUIREMENTS OF SUBSECTION 506.10 USING THE GMAW-INERT GAS PROCESS AND AWS ER 5356 ELECTRODE WIRE.
10. UNLESS OTHERWISE SPECIFIED, ANCHOR BOLTS SHALL BE CAST INTO THE CONCRETE AS DETAILED.
11. WHENEVER FEASIBLE BARRIER RAIL AND HAND RAIL SECTIONS, SHALL BE FULL LENGTH SECTIONS (40' ±) AND WHEN POSSIBLE SHALL BE ATTACHED TO THREE POSTS. RAILS SHALL BE SPLICED AT EACH DECK JOINT AND INTERMITTENTLY AS REQUIRED. SPLICES SHALL OCCUR WITHIN THE SAME PANEL.
12. ENDS OF RAILS SHALL BE CUT SQUARE AND GROUND FREE OF BURRS OR RAGGED EDGES. EXPOSED ENDS SHALL BE CAPPED.
13. THE CONCRETE CONTACT SURFACE AT THE POST BASE SHALL BE BUSH HAMMERED AND/OR SHIMMED AS REQUIRED FOR PROPER POST ALIGNMENT. POST HEIGHT ADJUSTMENTS LESS THAN 1/4" SHALL BE WITH 1/16" AND 1/8" SHIMS. CORRECTIONS EXCEEDING 1/4" SHALL BE WITH MORTAR, TYPE IV CONFORMING WITH SECTION 525. FABRIC BEARING PADS AND ANY REQUIRED SHIMS OR MORTAR, TYPE IV ARE INCIDENTAL TO THE UNIT PRICE BID FOR THE RAILING.
14. SHIMS AND 1/8" FABRIC BEARING PADS SHALL BE 10 3/4" SQUARE WITH SLOTTED HOLES SIZED AND LOCATED THE SAME AS THE POST BASE DETAIL. FABRIC BEARING PADS SHALL CONFORM TO SUBSECTION 731.01 OR 731.02, SHIM MATERIAL SHALL BE ASTM B 209 ALLOY 1100-O.
15. EXTRUDED SECTIONS ARE DETAILED TO COMPLY WITH CURRENT AASHTO-AGC-ARTBA STANDARDS. MINOR VARIATIONS OF THE DETAILS SHOWN MAY BE CONSIDERED PROVIDING THEY DO NOT REDUCE THE STRENGTH CAPACITY OF THE RAIL SYSTEM.
16. ALUMINUM WASHERS SHALL BE ASTM B209 ALLOY ACLAD 2024-T4.

PLOTTED 2/11/2009

DuBois & King inc.
engineering planning management development

STATE OF VERMONT
AGENCY OF TRANSPORTATION

Town Of BARRE CITY	Bridge No. 7
	Log Sta.
Highway No. PROSPECT ST.	Surv. Sta.
PROSPECT ST. OVER STEVENS BRANCH	
BRIDGE AND APPROACH RAILING DETAILS (2)	
Designed By A. P. GUYETTE	Drawn By S. J. BIJOLLE
Checked By E. P. DETRICK Date 1/09	Bridge Design Supervisor J. W. TUCKER Date 1/09
PROJECT BARRE CITY	PROJECT NO. BHF 6000 (15) S
I.G.C. Info.	
Bridge Sheet No.	Sheet 40 of 56

I:\R16410\DGN\z95j302brail.dgn 2/11/2009 1:06:09 PM