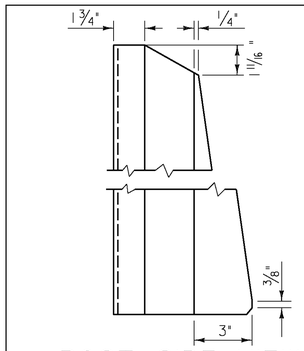

POST SIDE VIEW

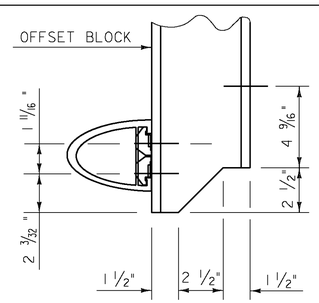

COPING DETAIL

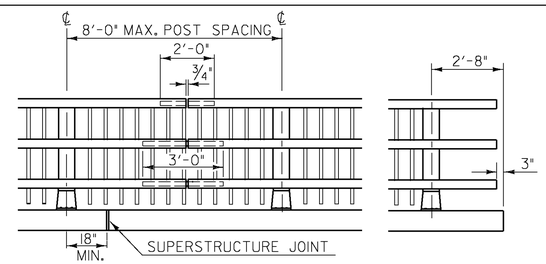

FRONT ELEVATION OF THREE RAIL WITH SPINDLES

NOTE : RAIL POSTS ARE TO BE SET NORMAL TO GRADE UNLESS OTHERWISE DESIGNATED ON BRIDGE PLANS. ALL DIMENSIONS ARE TYPICAL UNLESS OTHERWISE DESIGNATED ON BRIDGE PLANS.

THIS REFLECTORIZED ALUMINUM DELINEATOR IS TO BE ERECTED EVERY 30 FEET (OR CLOSEST POST) WITH 2 NO. 8 X 3/4" SELF-TAPPING SCREWS.

DELINEATORS SHALL MEET SPECIFICATION REQUIREMENTS FOR ASTM B209 ALLOY 5052-H32.

REFLECTIVE MATERIAL SHALL MEET THE REQUIREMENTS OF SUBSECTION 750.08 AND SHALL BE OF ENCAPSULATED LENS SILVER OR AMBER. AMBER IS TO BE INSTALLED ON THE DRIVER'S LEFT AND SILVER ON THEIR RIGHT.

ON BRIDGES WITH A SIDEWALK, DELINEATORS ARE NOT TO BE INSTALLED ON THE SIDEWALK SIDE OF THE BRIDGE (I.E. DELINEATORS INSTALLED ONLY ON THE CURB SIDE AND ON THE APPROACH RAIL ON THE CURB SIDE)

PAYMENT SHALL BE INCIDENTAL TO ALL OTHER ITEMS.

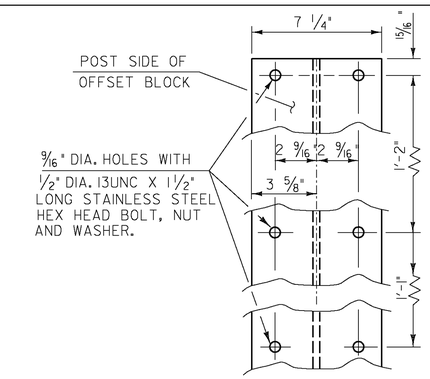

OFFSET BLOCK CONNECTION

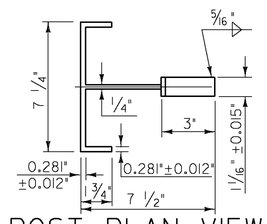

POST PLAN VIEW

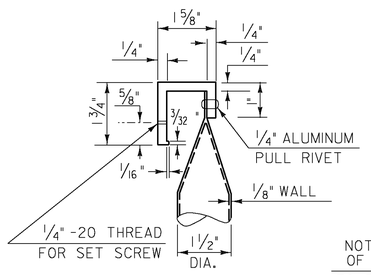

DETAIL A

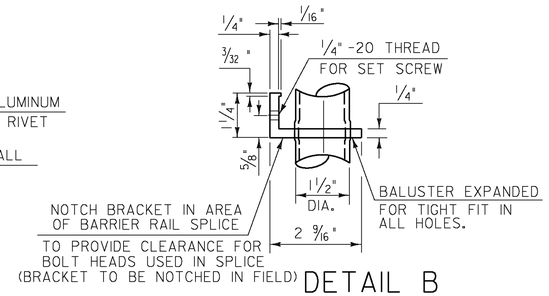

DETAIL B

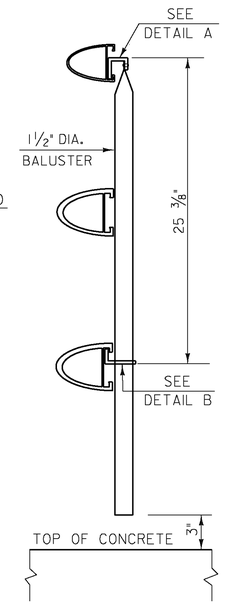

SECTION AA

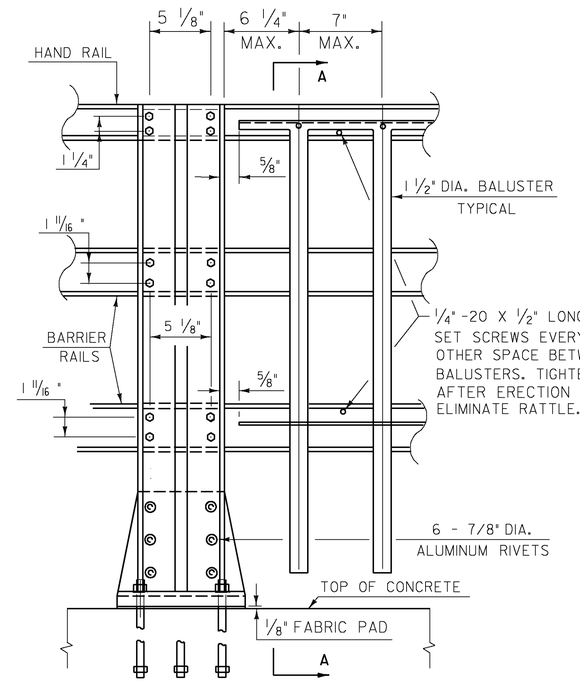

OUTSIDE ELEVATION OF THREE RAIL POST & SPINDLES

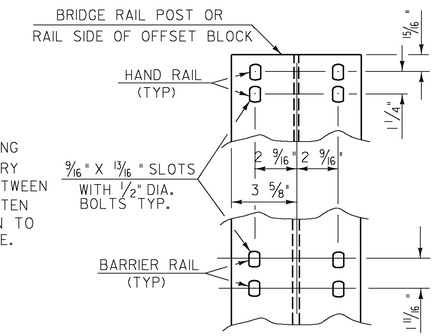

RAIL CONNECTION

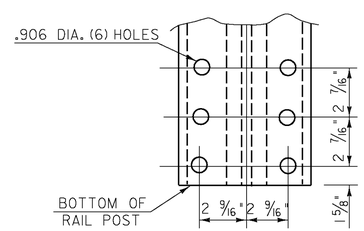

POST BASE BOLT HOLE DETAILS

DETAILS OF SPINDLES FOR ALUMINUM RAILING

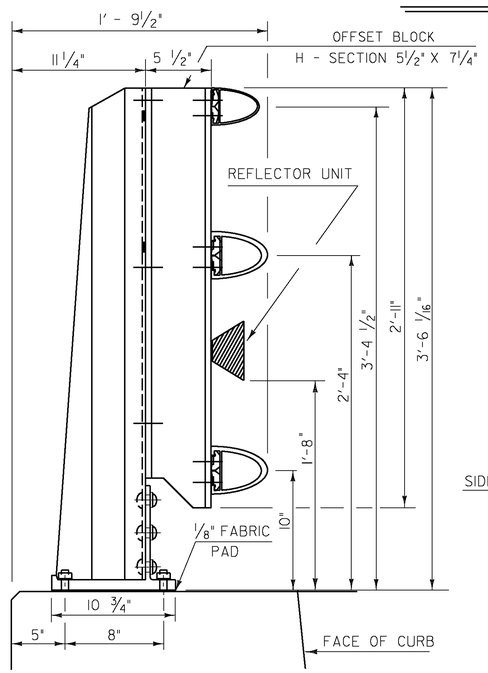

SIDE ELEVATION OF THREE RAIL TO BE USED ON CURB SIDE

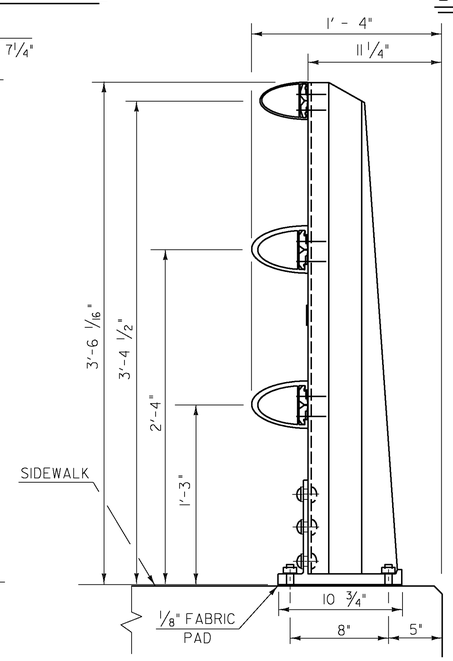

SIDE ELEVATION OF THREE RAIL TO BE USED ON SIDEWALK SIDE

RAIL POST DETAILS ON SUPERSTRUCTURE

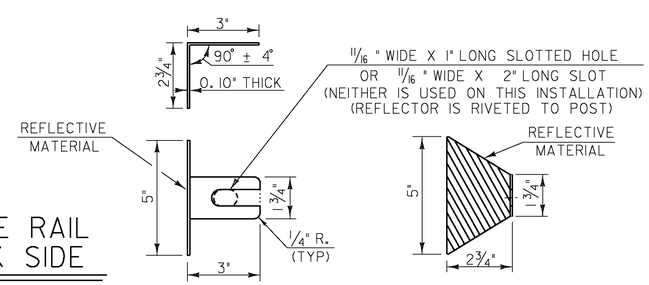

REFLECTOR DETAILS

PLOTTED 2/11/2009

DuBois & King inc.
engineering planning management development

STATE OF VERMONT
AGENCY OF TRANSPORTATION

Town Of BARRE CITY	Bridge No. 7
Highway No. PROSPECT ST.	Log Sta.
	Surv. Sta.

PROSPECT ST. OVER STEVENS BRANCH

BRIDGE AND APPROACH RAILING DETAILS (1)

Designed By A. P. GUYETTE	Drawn By S. J. BIJOLLE
Checked By Date	Bridge Design Supervisor
E. P. DETRICK 1/09	J. W. TUCKER Date 1/09
PROJECT BARRE CITY	PROJECT NO. BHF 6000 (15) S
I.G.C. Info.	
Bridge Sheet No.	Sheet 39 of 56

I:\R16410\DGN\z95j302brail.dgn 2/11/2009 1:05:57 PM