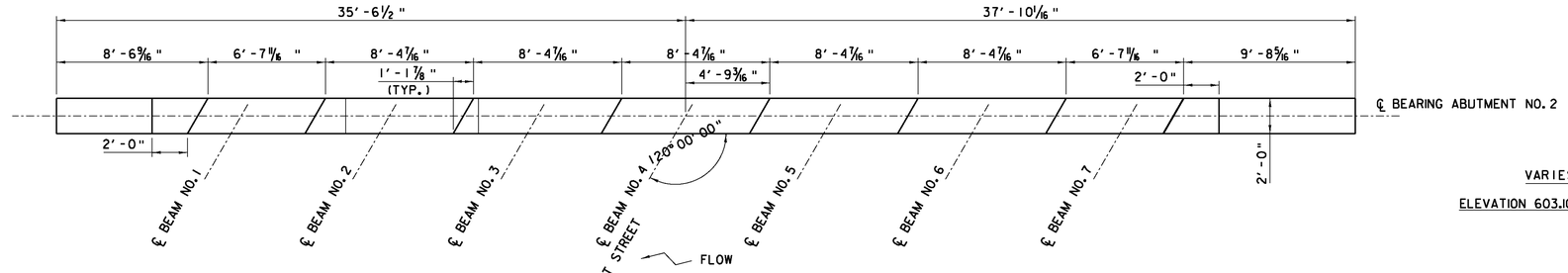

PLAN

℄ PROSPECT STREET (T.H. NO. 7)
AT INTERSECTION WITH ℄ BEARING

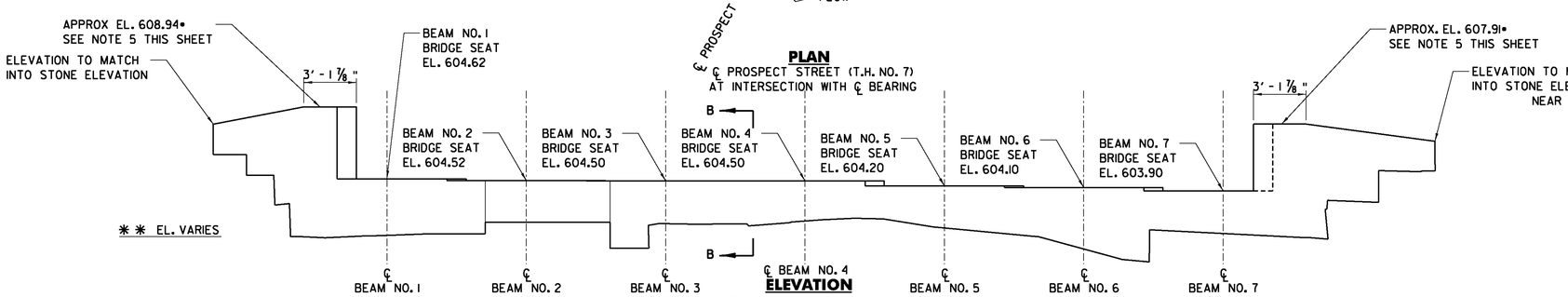

ELEVATION

ABUTMENT NO. 2 – MASONRY DETAILS

SCALE 1/4" = 1'-0"

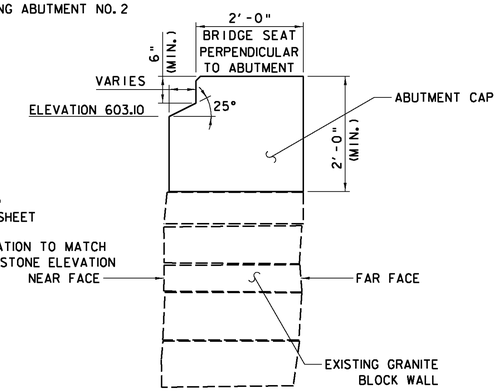

SECTION B–B

SCALE: 3/4" = 1'-0"

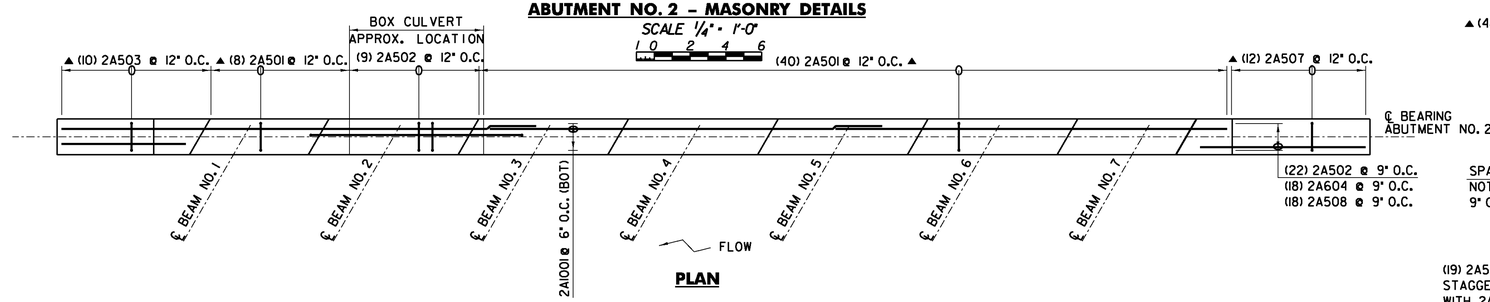

PLAN

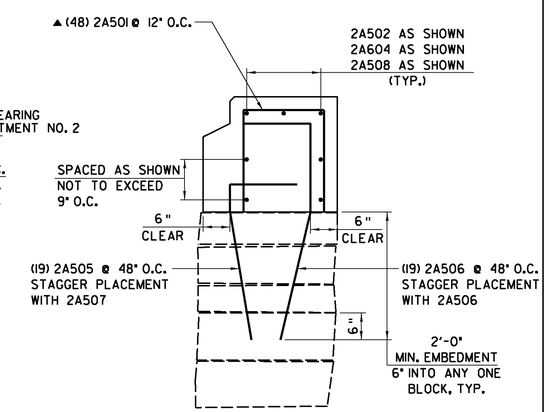

SECTION C–C

SCALE: 3/4" = 1'-0"

NOTE:
DRILL AND GROUT 2A505 AND 2A506 DOWELS INTO EXISTING GRANITE BLOCKS.

ADJUST SPACING OF THE DOWELS TO INSURE THAT NO HOLES ARE DRILLED LESS THAN SIX INCHES HORIZONTALLY FROM THE EDGE OF ANY STONE.

NOTES:

1. LOCATION OF EXISTING CULVERT UNDERNEATH NEW ABUTMENT IS APPROXIMATE. LOCATION SHALL BE CONFIRMED IN THE FIELD AND REINFORCEMENT POSITIONED APPROPRIATELY.
2. •• = ELEVATION VARIES AND SHALL PROVIDE FOR A MINIMUM OF 24" THICK BRIDGE SEAT.
3. ABUTMENT TOP WIDTH SHALL BE 2'-0 AT THE BRIDGE SEAT LOCATION. BOTTOM WIDTH SHALL VARY TO MATCH THE WIDTH OF THE GRANITE WALL.
4. ABUTMENT DIMENSIONS ARE ONLY APPROXIMATE. FOLLOWING THE PARTIAL REMOVAL OF THE EXISTING GRANITE BLOCKS, THE CONTRACTOR SHALL VERIFY ALL DIMENSIONS AND LENGTHS.
5. • = ELEVATION IS APPROXIMATE. FINAL TOP OF WINGWALL ELEVATION SHALL MATCH ELEVATION OF LEVEL PORTION OF BRIDGE SIDEWALK AT THE JOINT BETWEEN SUPERSTRUCTURE AND WINGWALL.

℄ PROSPECT STREET (T.H. NO. 7)
AT INTERSECTION WITH ℄ BEAM NO. 4

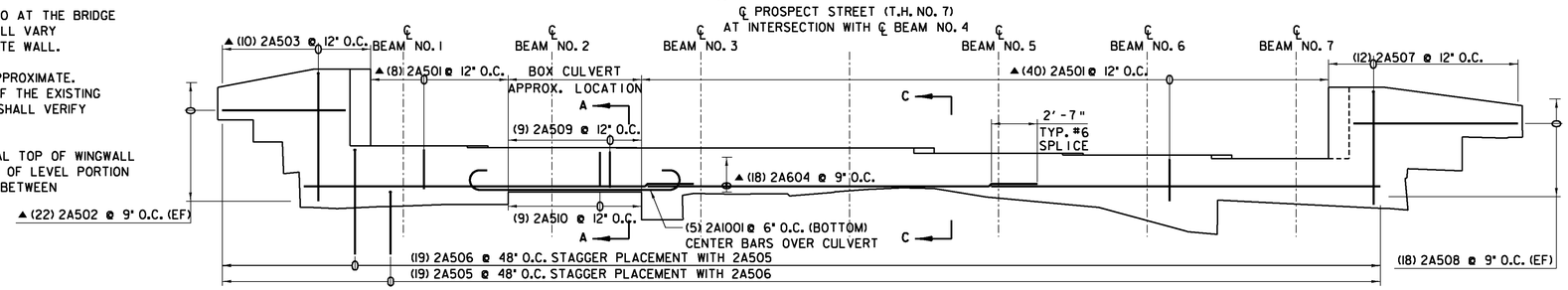

ELEVATION

ABUTMENT NO. 2 – REINFORCING DETAILS

SCALE 1/4" = 1'-0"

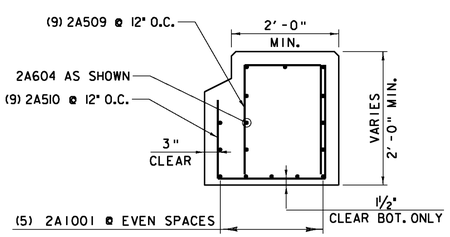

SECTION A–A
TO SPAN EXISTING BOX CULVERT

SCALE: 3/4" = 1'-0"

PLAN

N.F. = NEAR FACE
F.F. = FAR FACE
E.F. = EACH FACE
S = DECK OR SLAB
A = ABUTMENT
C = CURBING
△ = CUT TO FIT IN FIELD

PLOTTED 2/2/2009

DuBois & King inc.
engineering planning management development

STATE OF VERMONT
AGENCY OF TRANSPORTATION

Town Of	BARRE CITY	Bridge No.	7
Highway No.	PROSPECT ST.	Log Sta. / Surv. Sta.	

PROSPECT ST. OVER STEVENS BRANCH

ABUTMENT NO. 2 MODIFICATIONS

Designed By	A.P. GUYETTE	Drawn By	A.P. GUYETTE
Checked By	Date	Bridge Design Supervisor	
E. P. DETRICK	1/09	J. W. TUCKER	Date 1/09
PROJECT	BARRE CITY	PROJECT NO.	BHF 6000 (15) S
I.G.C. Info.			
Bridge Sheet No.		Sheet 35 of 56	

I:\R16410\DGN\z95j302abut.dgn 2/2/2009 9:52:05 AM