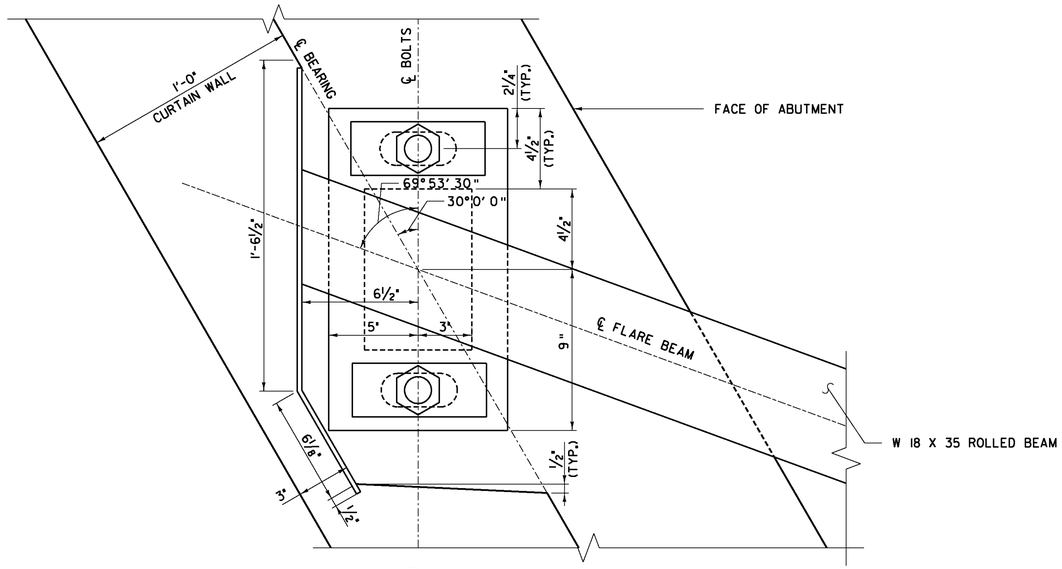

PLAN

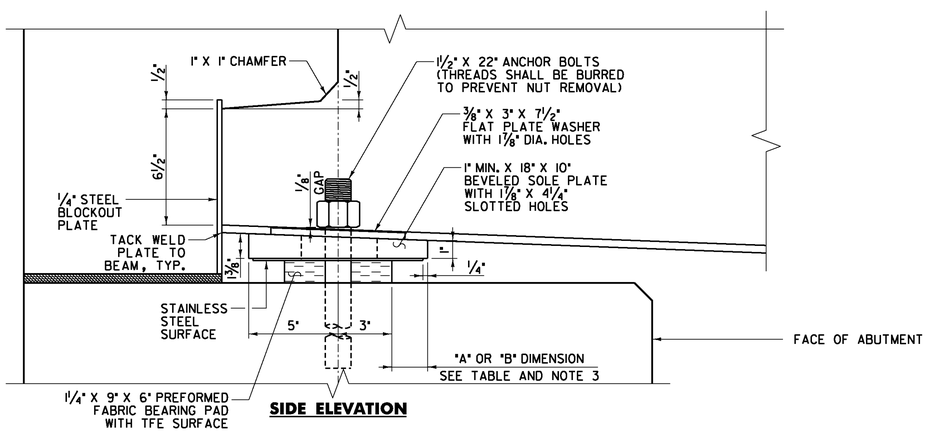

SIDE ELEVATION

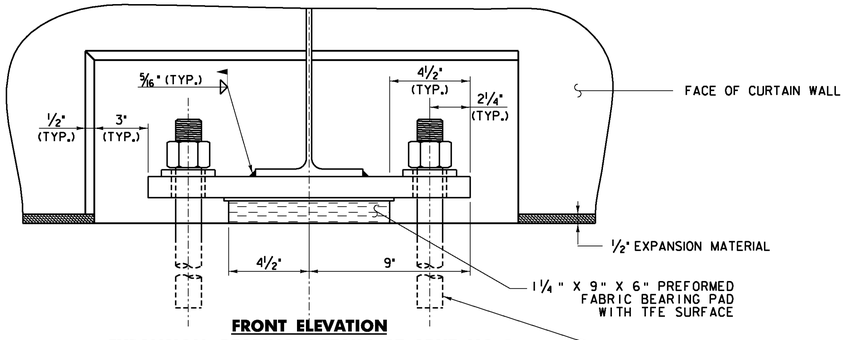

FRONT ELEVATION

EXPANSION BEARING DETAILS AT ABUT. NO. 1

SCALE 3" = 1'-0

1 9 6 3 0 1

BEARING NOTES

1. REFER TO SHEET 31 FOR BEARING NOTES.
2. FOR NOTE 4D, DESIGN LOAD FOR FLARE BEARING IS 20 KIPS (DEAD LOAD + LIVE LOAD).
3. "A" AND "B" DIMENSIONS FROM SHEET 31 SHALL BE APPLICABLE FOR FLARE BEARING.
4. THE BEARING DEVICE FOR THE FLARE BEAM WILL BE PAID AT THE SAME UNIT PRICE AS FOR THE OTHER BEARING DEVICES.

PLOTTED 2/2/2009

DuBois & King inc.
engineering planning management development

STATE OF VERMONT
AGENCY OF TRANSPORTATION

Town Of BARRE CITY	Bridge No. 7
	Log Sta.
Highway No. PROSPECT ST.	Surv. Sta.
PROSPECT ST. OVER STEVENS BRANCH	
FLARE BEAM BEARING DETAILS	
Designed By A.P. GUYETTE	Drawn By A.P. GUYETTE
Checked By E. P. DETRICK Date 1/09	Bridge Design Supervisor J. W. TUCKER Date 1/09
PROJECT BARRE CITY	PROJECT NO. BHF 6000 (15) S
I.G.C. Info.	
Bridge Sheet No.	Sheet 32 of 56

I:\R16410\DGN\z95j302fbd.dgn 2/2/2009 9:58:24 AM