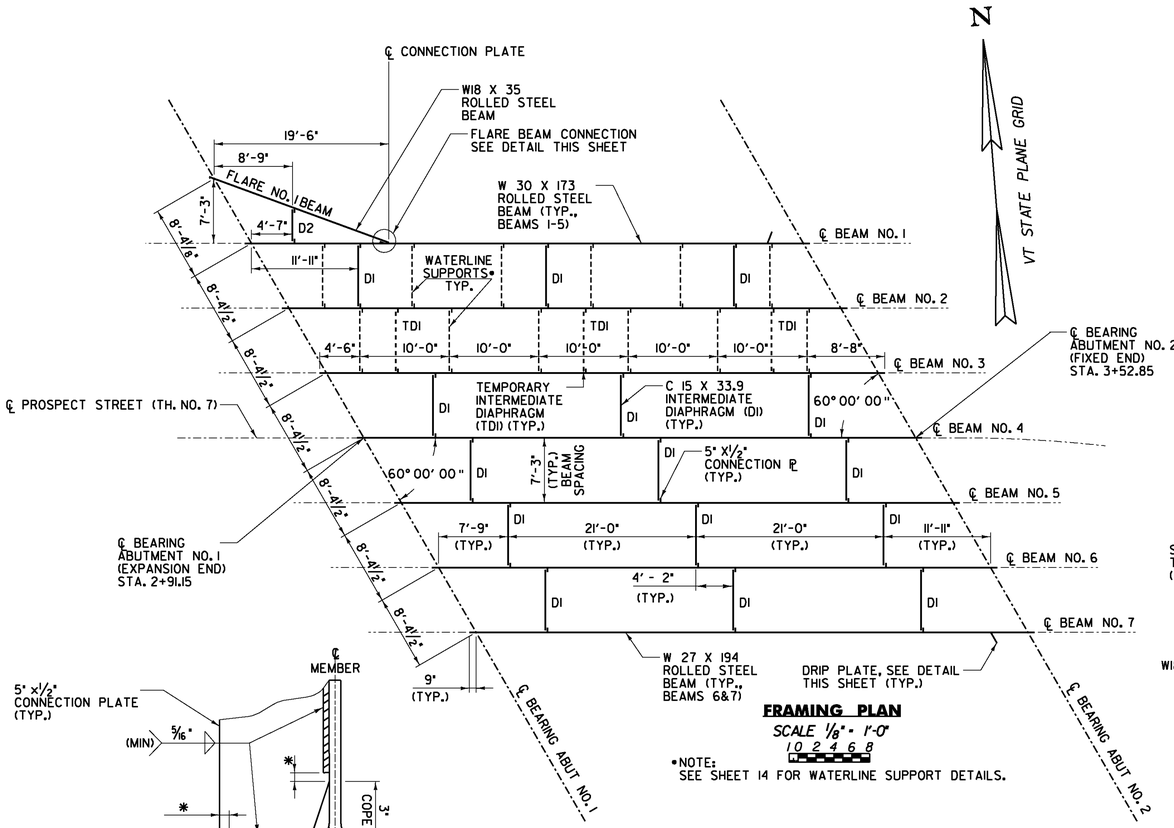


## FRAMING PLAN

SCALE 1/8" = 1'-0"

*NOTE:
SEE SHEET 14 FOR WATERLINE SUPPORT DETAILS.

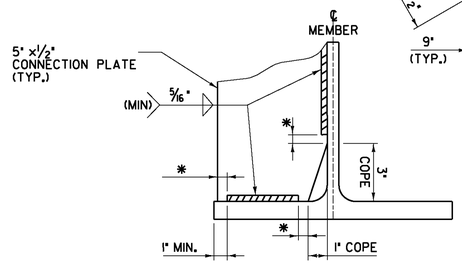


* NO WELD FOR 1/4" MIN. 1/2" MAX.
(EXCEPT MUST MAINTAIN 1" MINIMUM FROM EDGE OF FLANGE)

## WELD TERMINATION AND COPING DETAILS FOR STEEL BEAMS

NOT TO SCALE

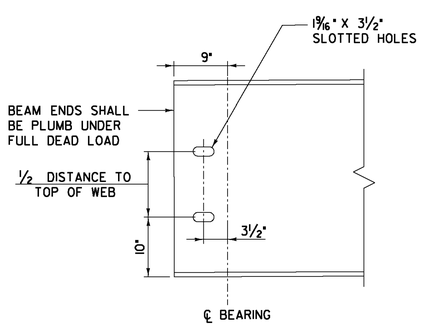


## ELEVATION - END OF W BEAM

NOT TO SCALE

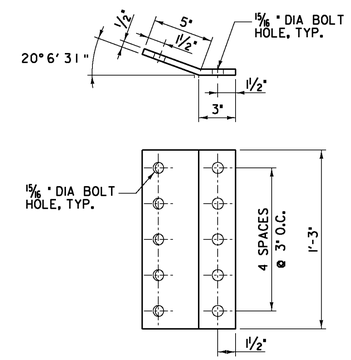


## BENT CONNECTION PLATE DETAIL

NOT TO SCALE

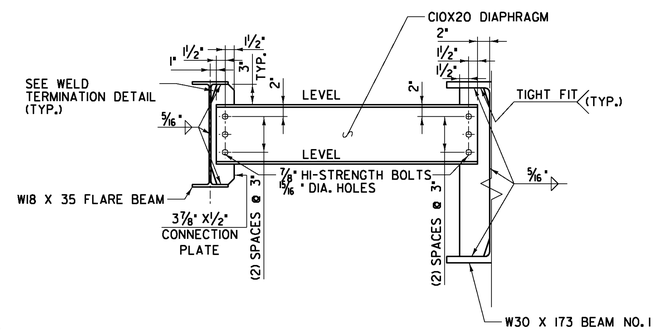


## FLARE BEAM DIAPHRAGM (D2)

NOTES: NOT TO SCALE
DIAPHRAGM TO BE LEVEL AFTER APPLICATION OF ALL DEAD LOADS.

FLARE BEAM CONNECTION PLATE TO BE ANGLED SO THAT DIAPHRAGM D2 IS PARALLEL TO ALL OTHER DIAPHRAGMS.

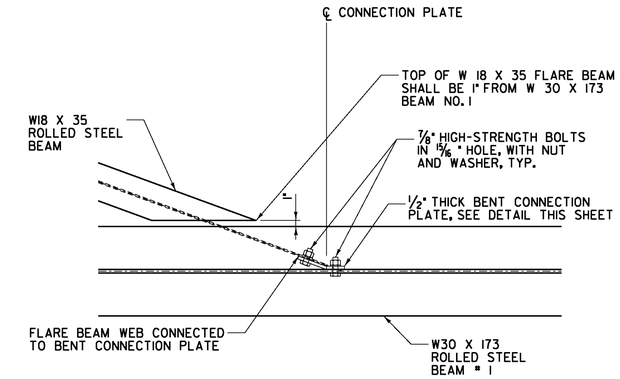


## FLARE BEAM CONNECTION DETAIL

NOT TO SCALE

NOTE:
SEE SHEET 30 FOR FLARE BEAM DETAILS

FOR CONNECTION OF FLARE BEAM TO CONNECTION PLATE, USE SAME BOLTING PATTERN AS FOR ROLLED SECTION DIAPHRAGMS, CENTERED VERTICALLY ON CONNECTION PLATE.

CONNECTION PLATE SHALL BE BOLTED TO W 18 X 35 FLARE BEAM PRIOR TO BOLTING TO W 30 X 173 BEAM NO. 1. FOR CONNECTION BETWEEN CONNECTION PLATE AND W 18 X 35 FLARE BEAM, BOLT HEADS SHALL BE PLACED ON ACUTE ANGLE SIDE.

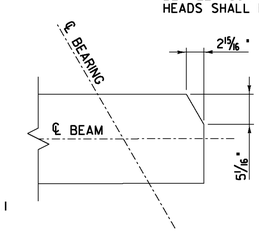


## W30 x 173 FLANGE CLIP

NOT TO SCALE

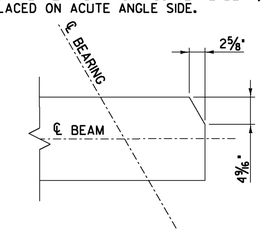


## W27 x 194 FLANGE CLIP

NOT TO SCALE

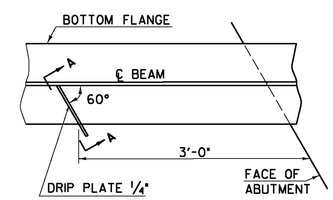


## PLAN DRIP PLATE

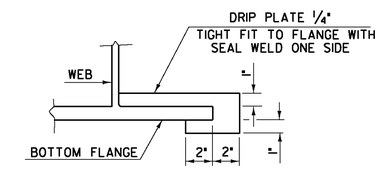


## SECTION A - A

NOTE: DRIP PLATES SHALL BE PLACED ON OUTSIDE EDGE OF FASCIA BEAMS AS INDICATED ON THE FRAMING PLAN.

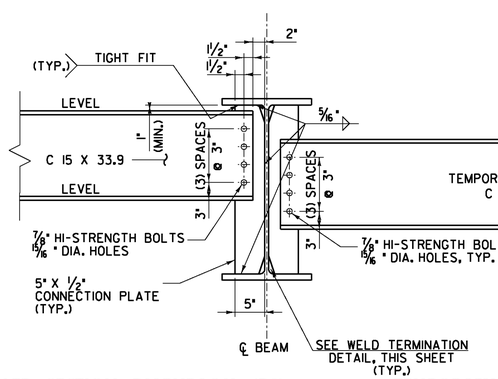


## ROLLED SECTION DIAPHRAGM (D1) (BAY 1)

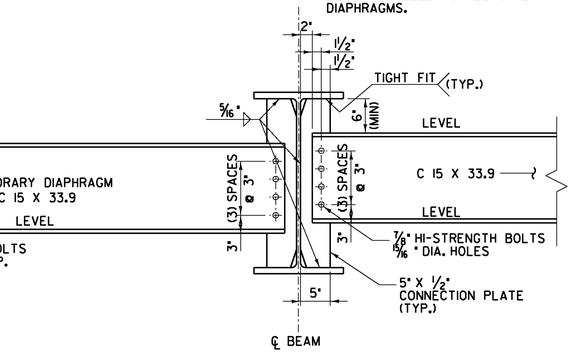


## TEMPORARY DIAPHRAGM (TD1) (BAY 2)




## ROLLED SECTION DIAPHRAGM (D1) (BAY 3 - BAY 6)

## INTERMEDIATE DIAPHRAGMS

NOT TO SCALE

NOTES:
DIAPHRAGMS TO BE LEVEL AFTER APPLICATION OF ALL DEAD LOADS.

ALL WELDS SHALL BE 5/16" FILLET WELDS CONSTRUCTED IN ACCORDANCE WITH THE SPECIFICATION.

PLOTTED 2/2/2009

DuBois & King inc.
engineering planning management development

# STATE OF VERMONT
## AGENCY OF TRANSPORTATION

| | |
|---|---|
| Town Of BARRE CITY | Bridge No. 7 |
| Highway No. PROSPECT ST. | Log Sta. / Surv. Sta. |

**PROSPECT ST. OVER STEVENS BRANCH**
**FRAMING PLAN AND DETAILS**

| | |
|---|---|
| Designed By A.P. GUYETTE | Drawn By A.P. GUYETTE |
| Checked By E. P. DETRICK Date 1/09 | Bridge Design Supervisor J. W. TUCKER Date 1/09 |
| PROJECT BARRE CITY | PROJECT NO. BHF 6000 (15) S |
| I.C.C. Info. | |
| Bridge Sheet No. | Sheet 28 of 56 |

I:\R16410\DGN\z95j302fp.dgn 2/2/2009 9:59:08 AM