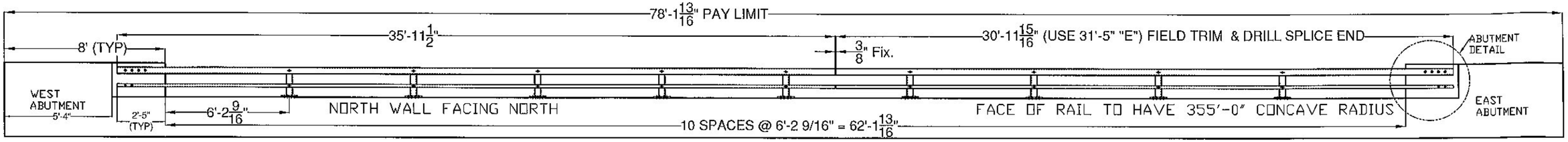

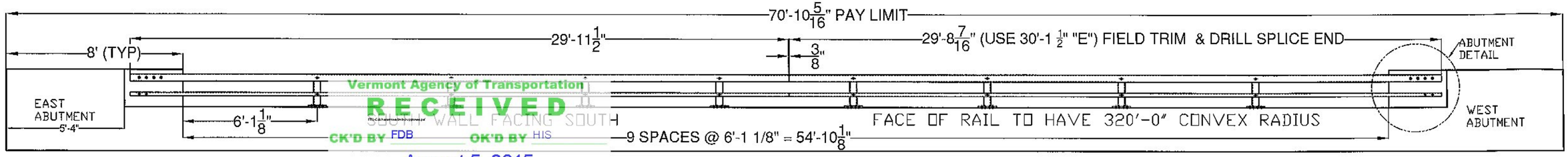

Vermont Agency of Transportation
RECEIVED
CK'D BY FDB OK'D BY HIS
August 5, 2015
RESUBMIT No Approved
BY Carolyn Carlson DATE 05/08/05

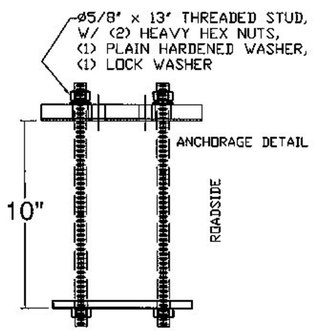

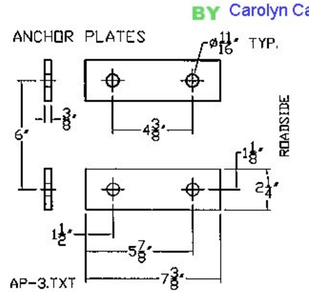

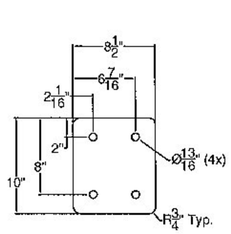

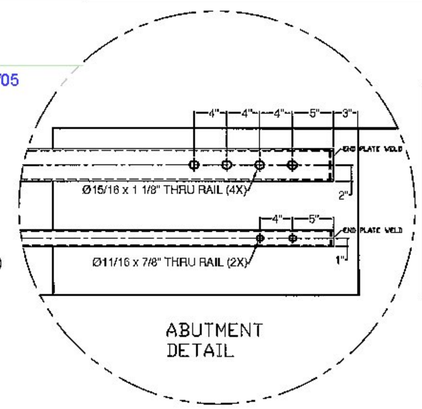

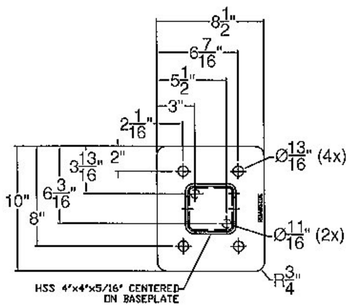

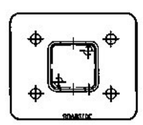

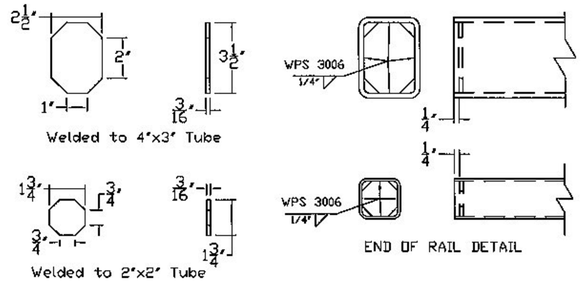

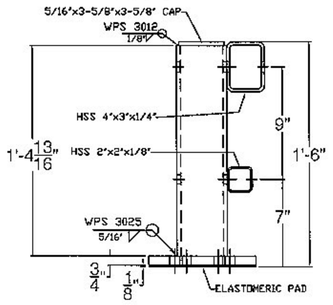

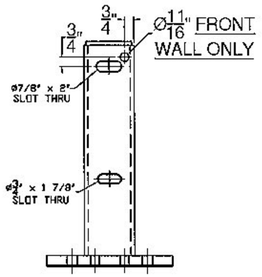

NOTES:

1. ALL WORK AND MATERIALS SHALL CONFORM TO SECTION 525.
2. PRIOR TO GALVANIZING THE ASSEMBLED POST, GRIND ALL EDGES TO A MINIMUM RADIUS OF 1/16".
3. ALL POSTS SHALL BE SET NORMAL TO GRADE.
4. SECTIONS OF RAIL TUBE SHALL BE ATTACHED TO A MINIMUM OF TWO BRIDGE POSTS AND PREFERABLY TO AT LEAST 4 POSTS.
5. HOLES IN RAILS FOR TUBE ATTACHMENT, WILL BE SHOP-DRILLED.
6. BOLTS SHALL BE TORQUED SNUG TIGHT (APPROXIMATELY 100 FT-LB).
7. RAIL TUBES SHALL BE ATTACHED USING FULL DIAMETER BODY ASTM A449 (TYPE I) ROUND HEAD BOLTS INSERTED THROUGH THE FACE OF THE TUBE.
8. SEE STANDARD DRAWING G-1 FOR DETAILS OF DELINEATORS. A DELINEATOR SHALL BE INSTALLED AT 30 FOOT SPACING OR THE NEAREST POST. WHITE IS TO BE INSTALLED ON THE DRIVER'S RIGHT. FOR ONE WAY BRIDGES, YELLOW IS TO BE INSTALLED ON THE DRIVER'S LEFT. PAYMENT FOR DELINEATORS SHALL BE INCIDENTAL TO OTHER ITEMS.
9. AESTHETIC TREATMENT TYPE SHALL BE APPLIED AS SPECIFIED IN THE CONTRACT PLANS. IF NONE IS SPECIFIED IT SHALL NOT BE USED. AESTHETIC TREATMENT DETAILED ON THIS SHEET MAY ALSO BE APPLIED ON THE FASCIA SIDE OF THE RAIL, IF SPECIFIED IN THE CONTRACT PLANS.
10. BRIDGE RAILING SHALL HAVE A RUBBED FINISH IN ACCORDANCE WITH SECTION 501.
11. THIS RAILING MEETS THE REQUIREMENTS FOR A NCHRP REPORT 350 TL-4 SERVICE LEVEL.
12. HOLES FOR MOUNTING DELINEATORS TO BE FIELD DRILLED. HOLES SHALL BE COATED WITH AN APPROVED ZINC-RICH PAINT PRIOR TO INSTALLATION.
13. ALL STEEL COMPONENTS OF BRIDGE RAILING AND BOX BEAM GUARDRAIL, INCLUDING THE RAIL CONNECTION TO THE BRIDGE RAIL SHALL BE GALVANIZED IN ACCORDANCE WITH THE STANDARD SPECIFICATIONS.

BILL OF MATERIAL

ITEM #	QTY	PART #	DESCRIPTION	ASTM DESIGNATION
1	17	0033.90017	TWO RAIL POST & BASE PLATE ASSEMBLY	A572 Gr. 50, A500 Gr. B
2	1	0033.900025	2" X 2" X 1/8" RAIL @ 35'-11 1/2" W/ 355' CONCAVE R. & END PLATES	A500 Gr. B
3	1	0033.900026	2" X 2" X 1/8" RAIL @ 31'-5" 'E' W/ 355' CONCAVE R. & END PLATES	A500 Gr. B
4	1	0033.900027	2" X 2" X 1/8" RAIL @ 29'-11 1/2" W/ 320' CONVEX R. & END PLATES	A500 Gr. B
5	1	0033.900028	2" X 2" X 1/8" RAIL @ 30'-1 1/2" 'E' W/ 320' CONVEX R. & END PLATES	A500 Gr. B
6	1	0033.900029	4" X 3" X 1/4" RAIL @ 35'-11 1/2" W/ 355' CONCAVE R. & END PLATES	A500 Gr. B
7	1	0033.900030	2" X 2" X 1/8" RAIL @ 31'-5" 'E' W/ 355' CONCAVE R. & END PLATES	A500 Gr. B
8	1	0033.900031	4" X 3" X 1/4" RAIL @ 29'-11 1/2" W/ 320' CONVEX R. & END PLATES	A500 Gr. B
9	1	0033.900032	4" X 3" X 1/4" RAIL @ 30'-1 1/2" 'E' W/ 320' CONVEX R. & END PLATES	A500 Gr. B
10	2	0033.90069	1-1/2" X 1-1/2" FIX. SPL BAR @ 2' 4"	A572 Gr. 50
11	2	0033.90071	2-1/4" X 3-1/4" FIX. SPL. BAR @ 2' 4"	A572 Gr. 50
12	34	0033.00295	3/8" X 2 1/4" X 7 3/8" ANCHOR PLATES	A36
13	70*	0042.05813	Ø 5/8" X 13" ANCHOR STUDS	A449
14	138*	0080.15901	Ø 5/8" HEAVY HEX NUTS	A563
15	70*	0080.15911	Ø 5/8" FLAT WASHERS	F436
16	68	0080.15920	Ø 5/8" LOCK WASHERS	ASME D18.2
17	17	0080.05565	Ø 5/8" X 7 1/2" SLOTTED, ROUND HEAD BOLT, NUT, F.W., & L.W.	A449, A563 DH, F436, & ASME D18.21.1
18	17	0080.06410	Ø 3/4" X 8 1/2" SLOTTED, ROUND HEAD BOLT, NUT, F.W., & L.W.	A449, A563 DH, F436, & ASME D18.21.1
19	8	0080.05275	Ø 5/8" X 3" HEX BOLT, NUT, F.W., & L.W.	A325, A563 DH, F436, & ASME D18.21.1
20	8	0080.07330	Ø 7/8" X 5 1/2" HEX BOLT, NUT, F.W., & L.W.	A325, A563 DH, F436, & ASME D18.21.1
21	8	0080.05760	Ø 5/8" X 13" SLOTTED, ROUND HEAD BOLT, NUT, F.W., & L.W.	A449, A563 DH, F436, & ASME D18.21.1
22	16	0080.07710	Ø 7/8" X 14" SLOTTED, ROUND HEAD BOLT, NUT, F.W., & L.W.	A449, A563 DH, F436, & ASME D18.21.1
23	17	0033.00053	1/8" ELASTOMERIC PAD	D2240
24	6		DELINEATORS (SUPPLIED BY F.R. LaFAYETTE)	ALUMINUM

*-2 EXTRA FOR VOAT TESTING

NOTE: FIELD TRIM & DRILL OF SPLICE END IS DUE TO FIX JOINT WITH MINIMAL TOLERANCE FOR LENGTH CHANGES IN THE RAIL DUE TO FORMING RADIUS.

HARDWARE NOTES

ITEM #	FUNCTION
17	BOLT BOTTOM RAIL TO POST (ITEM #1)
18	BOLT TOP RAIL TO POST (ITEM #1)
19	BOLT BOTTOM SPLICE BARS (ITEM #6) TO BOTTOM RAIL
20	BOLT TOP SPLICE BARS (ITEM #7) TO TOP RAIL
21	BOLT BOTTOM RAIL TO END ABUTMENT
22	BOLT TOP RAIL TO END ABUTMENT

ITEM #: 525.45

SHEET 1 OF 6

STRUCTURAL STEEL TO COMPLY W/ ASTM A6

TOLERANCE UNLESS OTHERWISE NOTED:
FRACTIONS = ± 1/16"
ANGLES = ± 1/2°
DIAMETERS = ± 1/32"

BRIDGE RAIL DETAILS SHEET

T.H. 27 (URBAN COLLECTOR), BRIDGE # 12
TOWN OF COLCHESTER, CHITTENDEN COUNTY

R E V	NO.	DATE	DESCRIPTION	BY	R E V	NO.	DATE	DESCRIPTION	BY
	1	4/27/15	REVISE PER 4/22/15 MARK-UP	E.P.					

ELDERLEE, INC.
OAKS CORNERS, NEW YORK 14518
E-Mail: dlong@elderlee.com / epeek@elderlee.com
Tel: 315-789-6670 Fax: 315-789-6615

AISC CERTIFIED FABRICATOR

DRAWN	E.P.	4/9/15
CHECKED	D.L.	4/9/15
APPROVED		
SCALE	SCHEMATIC	
DRAWING NO.	FRL - COLCHESTER	