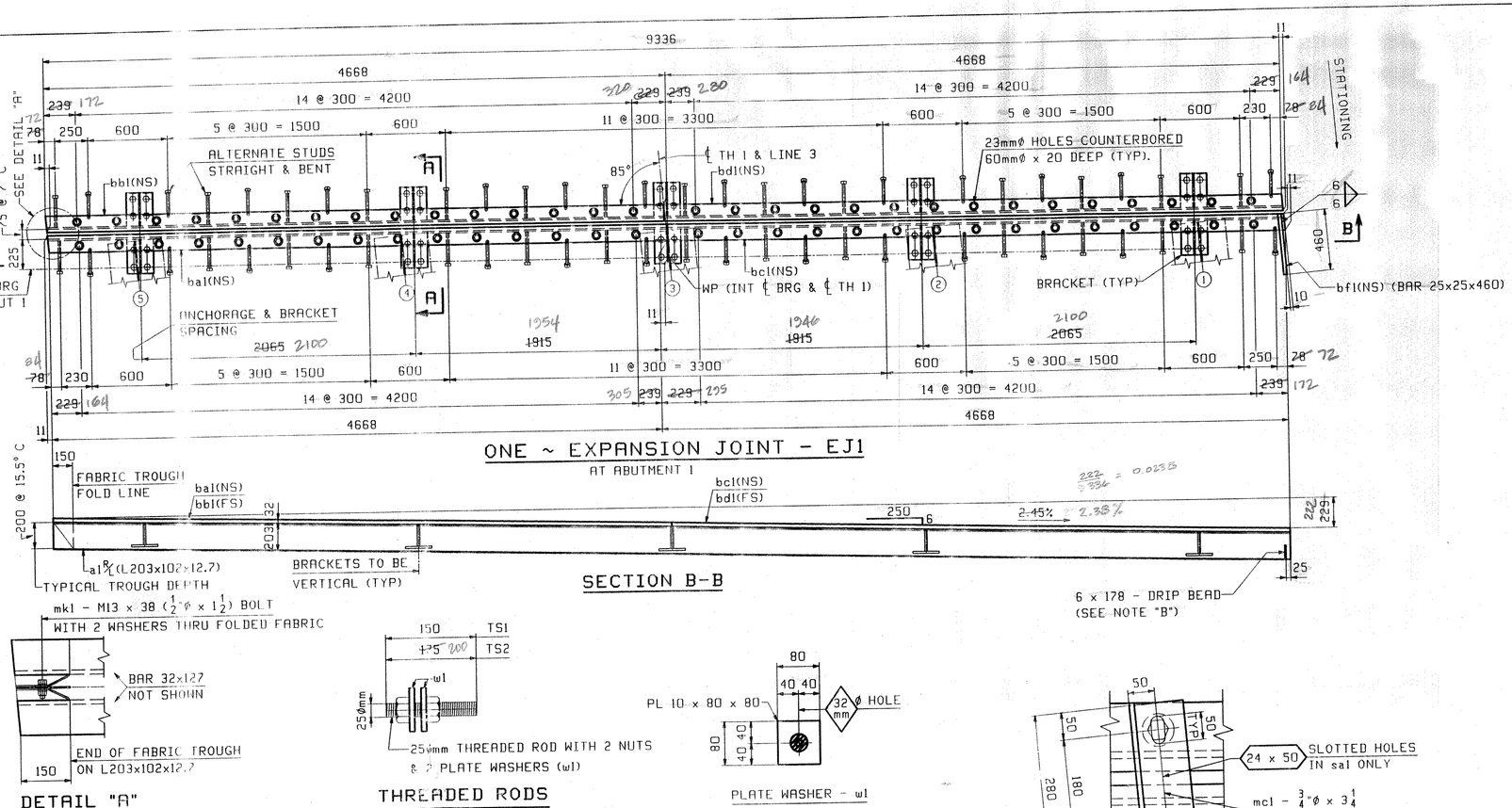

DETAIL "A"

THREADED RODS

20 REQ'D OF EACH

PLATE WASHER - wl

80 REQ'D

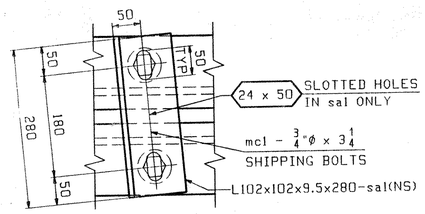

DETAIL @ SHIPPING DEVICES

SPACED AT 1500 MAX (6 REQ'D)

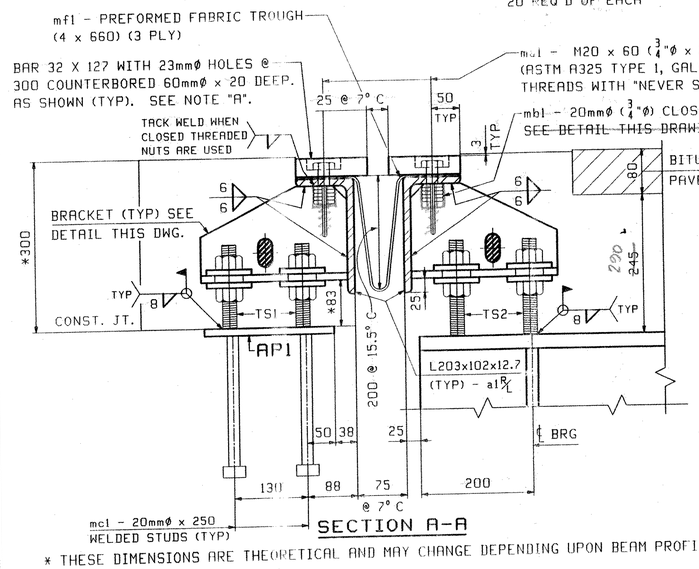

SECTION A-A

* THESE DIMENSIONS ARE THEORETICAL AND MAY CHANGE DEPENDING UPON BEAM PROFILES.

NOTE "A"
FILL COUNTERBORED HOLES WITH HOT POURED JOINT SEALER (STANDARD SPECIFICATION 707.04 AS MODIFIED BY THE GENERAL SPECIAL PROVISIONS) AFTER BOLT INSTALLATION. PAYMENT FOR THE WORK SHALL BE INCIDENTAL TO ITEM 516.10.

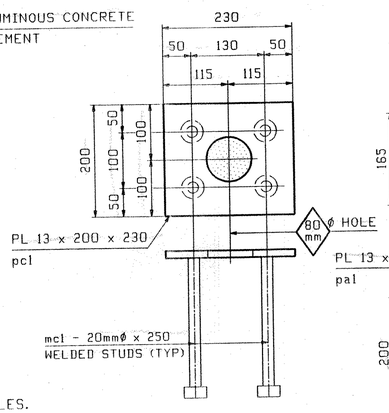

ANCHORAGE - AP1

5 REQ'D (NO GALV REQ'D)

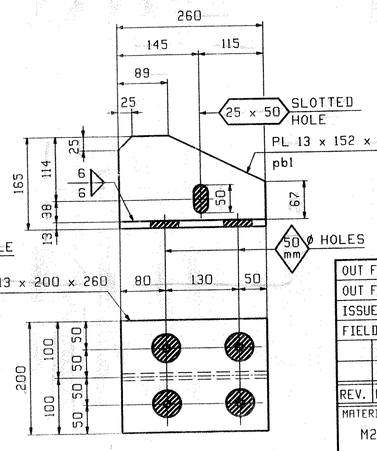

BRACKET DETAIL

10 REQ'D

ANCHOR FERRULE DETAIL

NOTE: CLOSED THREADED FERRULE NUTS WITHOUT ANCHOR LOOPS MAY BE USED.

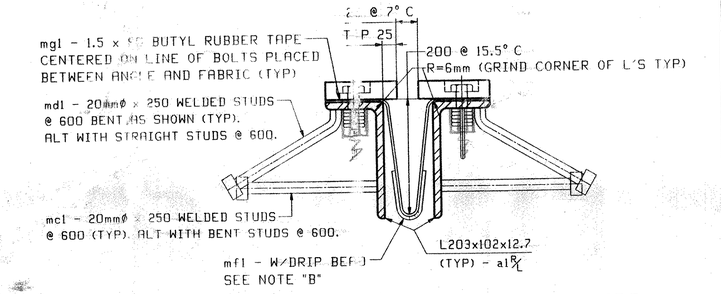

TYPICAL SECTION BETWEEN GIRDERS

NOTE "B"
A DRIP BEAD OF 6 x 178 STRIP OF PREFORMED MATERIAL SHALL BE CEMENTED TO THE BOTTOM OF THE FABRIC TROUGH USING AN ADHESIVE APPROVED BY THE MANUFACTURER. THE DRIP BEAD SHALL BE APPLIED 25mm FROM THE DOWNSPOUT END OF THE TROUGH.

BILL OF MATERIAL

JOB NO. 285 — DRAWING NO. J1 — REV.

ABM INFO PAGE	ABM INFO LINE	SHIP MARK	QTY	MARK	MATERIAL	LENGTH m	LENGTH mm	REMARKS	WT	PROCUREMENT NOTES
		EJ1	1		EXPANSION JOINT				299 kg 2863 lbs	
1	B		1	al'	L 203x102x12.7	9	350			
1	B		1	al"	L 203x102x12.7	9	350			
1	C		1	bal	BR 32x127	4	~~658~~ 679			
1	C		1	bbl	BR 32x127	4	~~679~~ 668			
1	C		1	bcl	BR 32x127	4	668			
1	C		1	bdl	BR 32x127	4	~~679~~			
1	D		1	bfl	BR 25x25	0	460			
1	E		10	pal	PL 13x200	0	260			
1	F		10	pbl	PL 13x152	0	260			
1	J		60	mal	3/4 ø HSB M20	0	~~2 1/2~~ 2 1/4 60	(GALV) (A325-1)		
1	K		60	mbl	3/4 ø ANCHOR FERRULE NUT			(GALV)		
1	L		28	mcl	STUD 20 ø	0	250	STUDS (A108)		
1	M		28	mdl	STUD 20 ø	0	250	BENT STUDS (A108)		
1	N		1	mfl	FABRIC DRAIN	9	350	3-PLY (4 x 660) W/DRIP BEAD		
1	P		2	mgl	TAPE 1.5x80	9	350	BUTYL RUBBER		
1	Q		1	mk1	1/2 ø HSB M13	0	~~1 1/2~~ 1 3/8	(GALV) (A325-1)		
1	R		2		1/2 ø HSW M13			(GALV) (F436)		
2	B		6	sal	L 102x102x9.5	0	280	SHIPPING DEVICE		
2	C		12		3/4 ø HSB	0	3 1/4	SHIPPING BOLTS (A325-1)		
2	D		12		3/4 ø HSW			(F436)		
		AP1	5		ANCHORAGE				6 kg 13 lbs	
1	G		5	pcl	PL 13x200	0	230			
1	L		20	mcl	STUD 20 ø	0	250	STUDS (A108)		
		TS1	20		THREADED RODS				2 kg 4 lbs	
2	G		20		ROD ~~20~~ 25 ø	0	150	(1"ø ROD)		
2	J		40	wl	PL 10x80	0	080			
2	K		40		1/2 HHN			(A563)		
		TS2	20		THREADED RODS				2 kg 4 lbs	
2	H		20		ROD ~~20~~ 25 ø	0	~~175~~ 200	(1"ø ROD)		
2	J		40	wl	PL 10x80	0	080			
2	K		40		1/2 HHN			(A563)		

REV.	REMARKS	DATE	DWN	CHK	APP	Q.A.	NO.	DIA.	LGT	TYPE	WASHER
	OUT FOR APPROVAL	8-2-06									
	OUT FOR APPROVAL										
	ISSUED TO SHOP										
	FIELD & OFFICE										

MATERIAL: M270M-250 — ELECTRODES: — HOLES: AS NOTED — SHOP BOLTS: AS NOTED

SURFACE PREP. & PAINT: GALVANIZED AFTER FABRICATION (EXCEPT AS NOTED)

DESCRIPTION: EXPANSION JOINT (ABUT 1)

JOB: TH 1 (FAS 160) OVER OTTER CREEK
BRIDGE NO. 6
TOWN OF LEICESTER, VERMONT
COUNTY OF ADDISON
CONTRACTOR: BLOW & COTE

TENSOR 2650 REF: 2603

PROJ NO. BRF 0160(39)S

CUSTOMER: VT AOT

DRAWN BY	JTB
DATE	07/21
CHKD BY	
PCP	07/31
APPROV BY	
SUPERVISOR	W. J. GATTI
Q.A.	

CASCO BAY STEEL STRUCTURES, INC.
75 SPRING HILL ROAD SACO, MAINE 04072
PHONE (207) 282-7360 FAX. (207) 282-1179

JOB NO. 285 — DRG. NO. J1 — REV.

— FILE SET —

VTRANS
RECEIVED
CK'D BY G. Ray 8-14-06 — OK'D BY [illegible] 8-15-06
AUG 11 2006
RESUBMIT ____ APPROVED AS NOTED
BY RRW DATE 8/17/06
1 of 2 SS