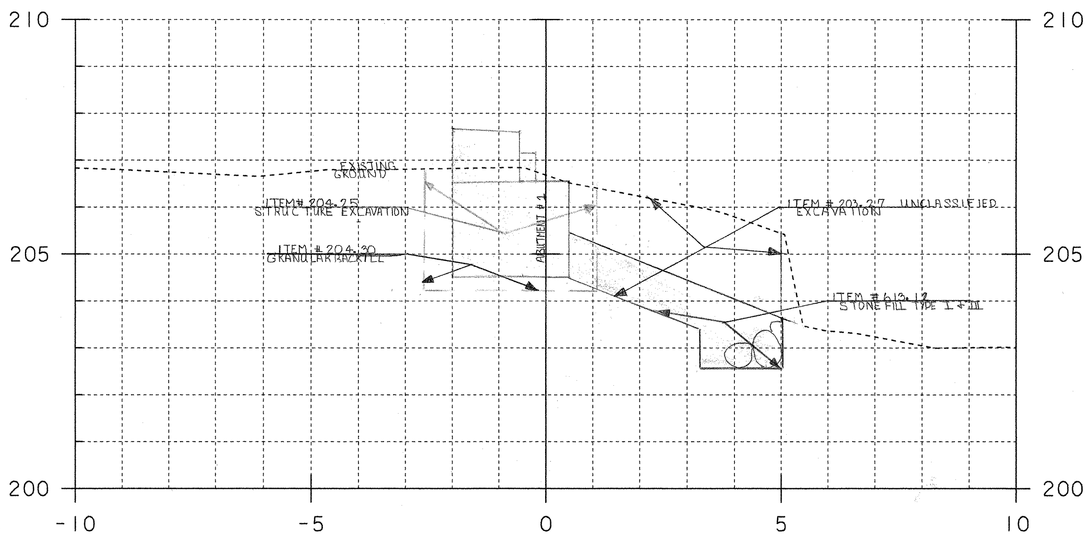

5+002.80

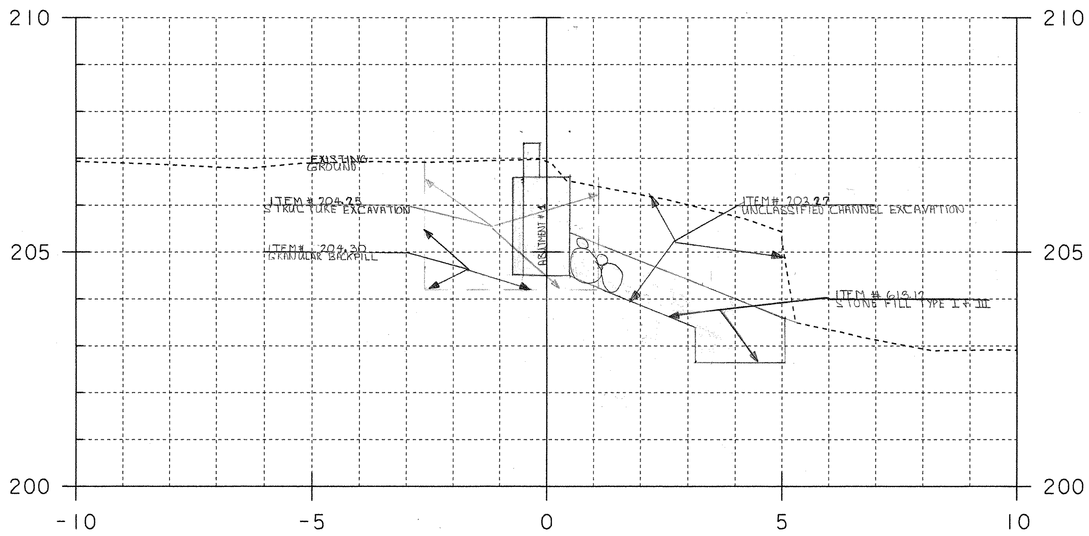

5+002.00

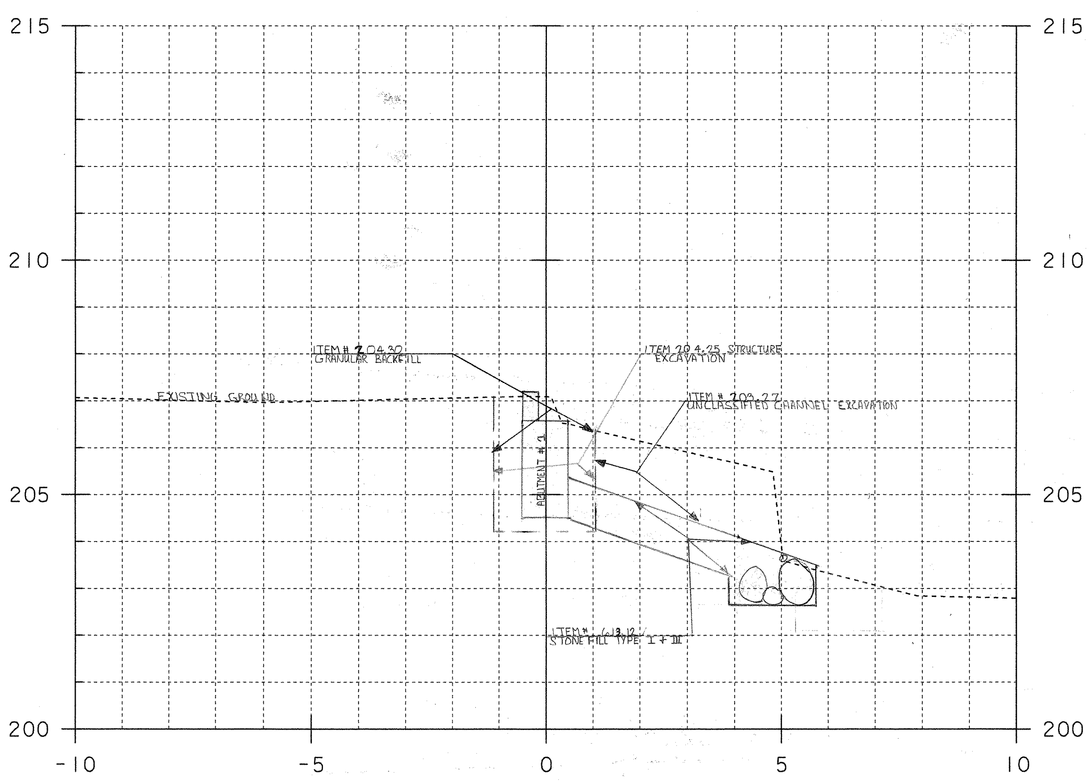

5+000.00

PROJECT NAME: Clarendon
PROJECT NUMBER: BRO 1443(34)
FILE NAME: 951286\survey\work.dgn
PROJECT LEADER:
DESIGNED BY:
PLOT DATE: 05-APR-2006
DRAWN BY: R. Bullock
CHECKED BY:
SHEET 3 OF 8