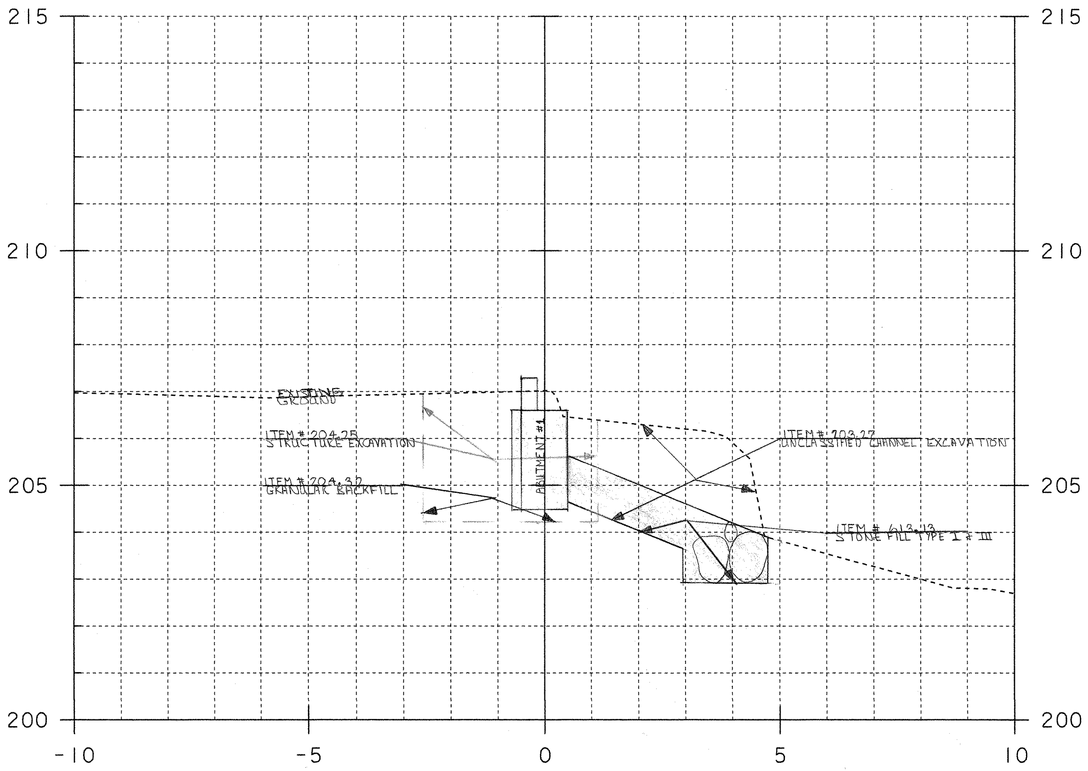


4+998.00

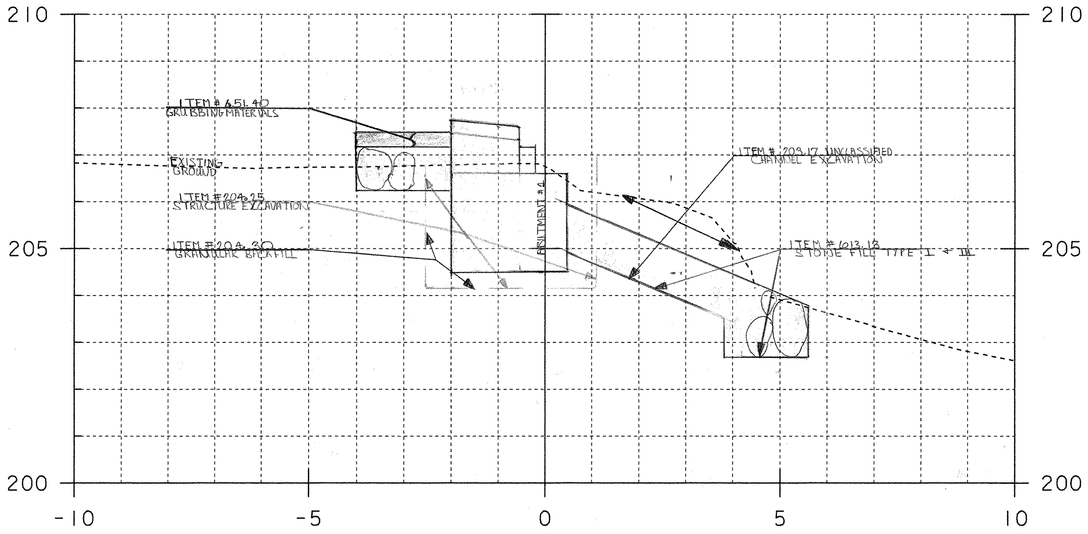


4+997.10

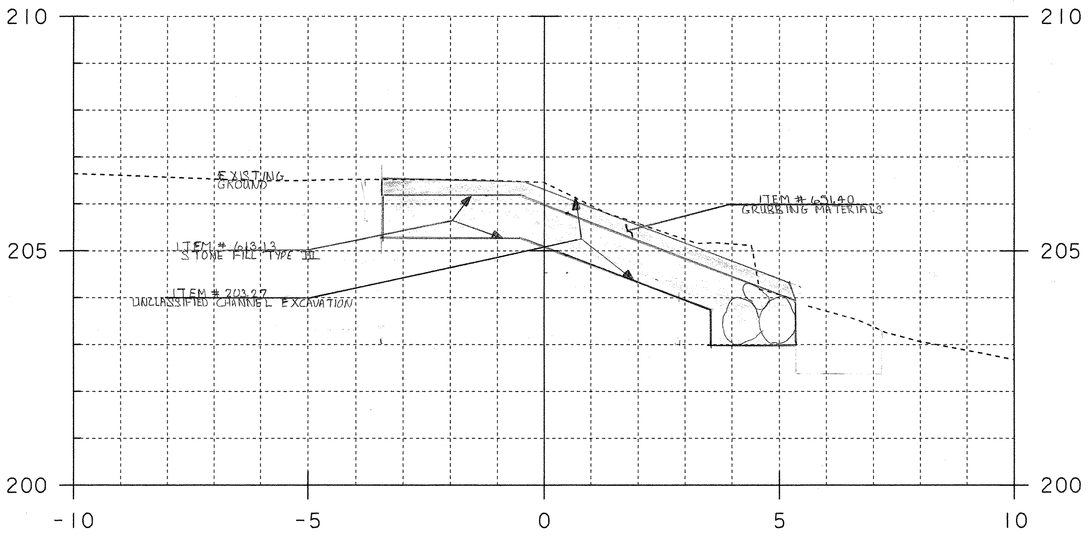


4+996.00

PROJECT NAME: Clarendon
PROJECT NUMBER: BRO 1443(34)
FILE NAME: 95J286\surveywork.dgn
PROJECT LEADER:
DESIGNED BY:
PLOT DATE: 05-APR-2006
DRAWN BY: R. Bullock
CHECKED BY:
SHEET 2 OF 8