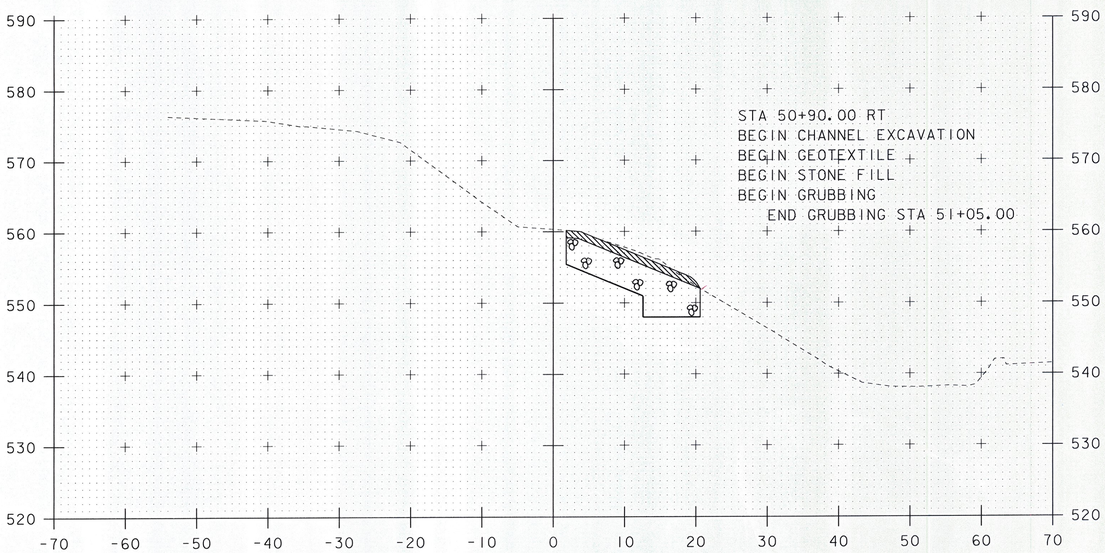

51+00

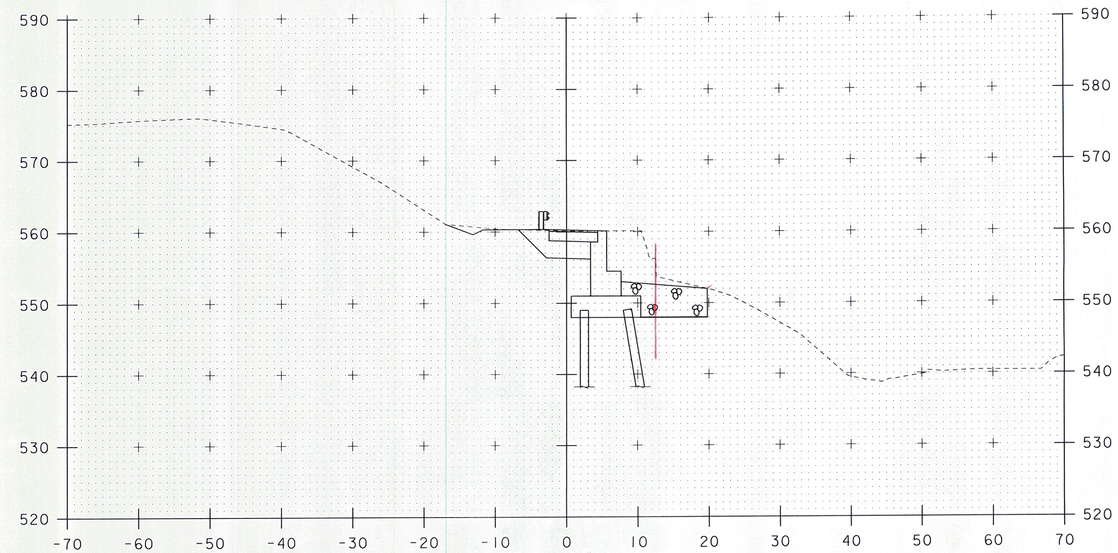

51+20

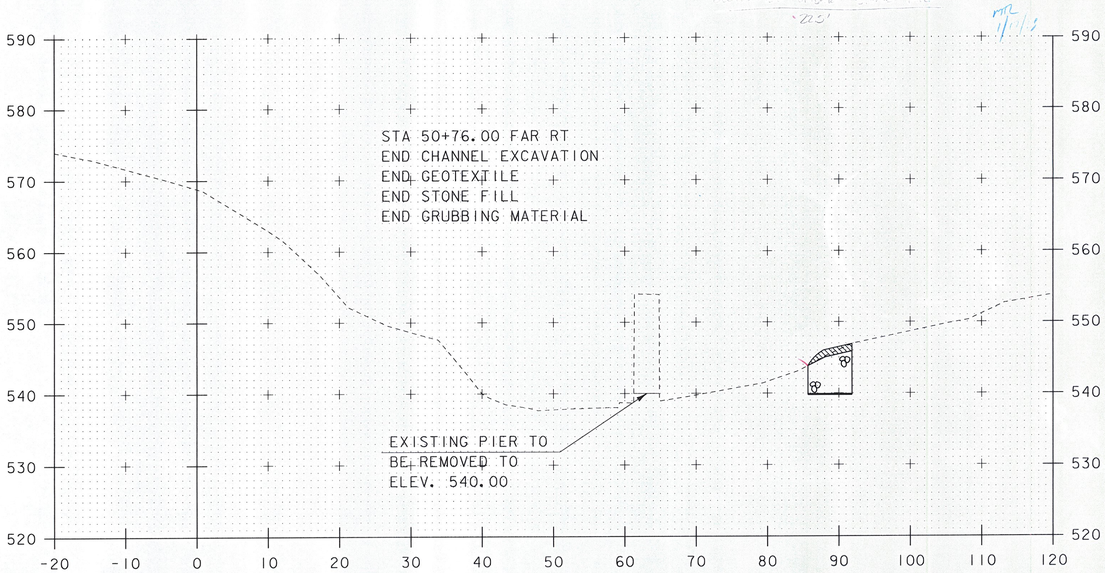

50+75

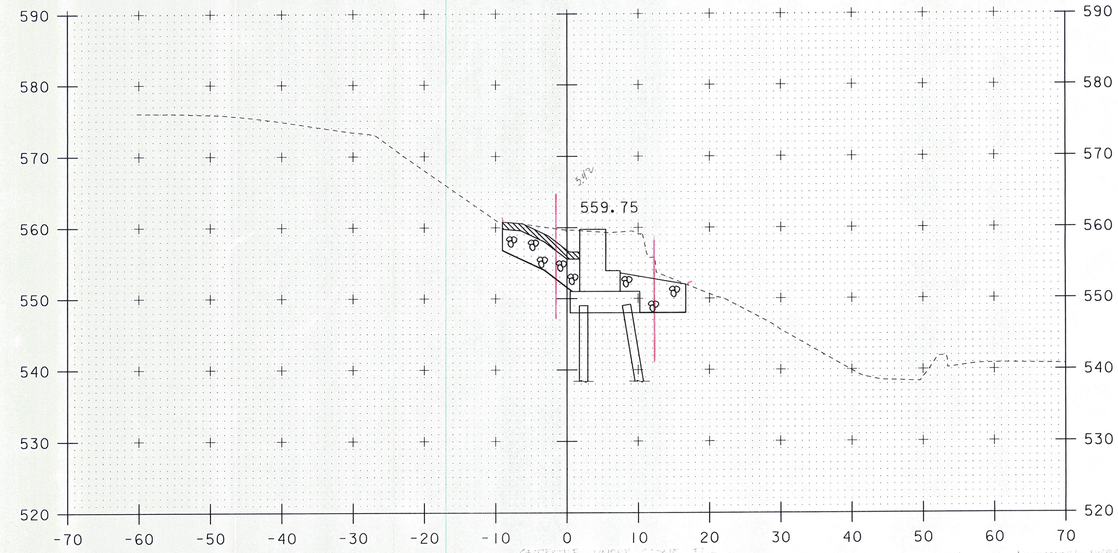

51+10

SCALE 1" = 10'-0"
10 0 10

STA. 50+75 TO STA. 51+20

PROJECT NAME: SPRINGFIELD	
PROJECT NUMBER: BRO 1442(26)	
FILE NAME: s95J282xsl.dgn	PLOT DATE: 30-AUG-2011
PROJECT LEADER: K. HIGGINS	DRAWN BY: J. SALVATORI
DESIGNED BY: J. SALVATORI	CHECKED BY: J. LACROIX
CHANNEL CROSS SECTIONS - 3	SHEET 51 OF 52