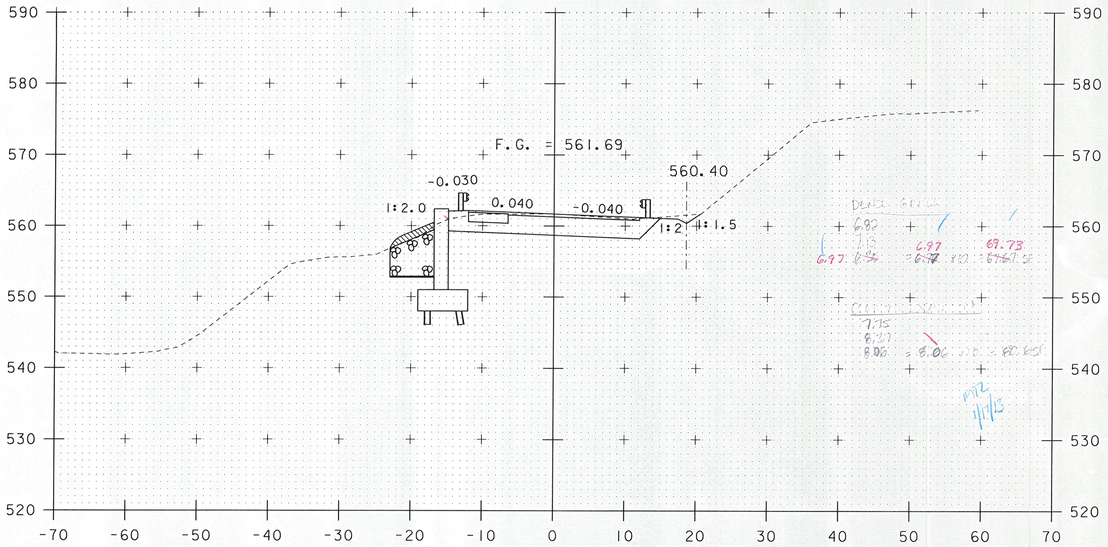

11+25

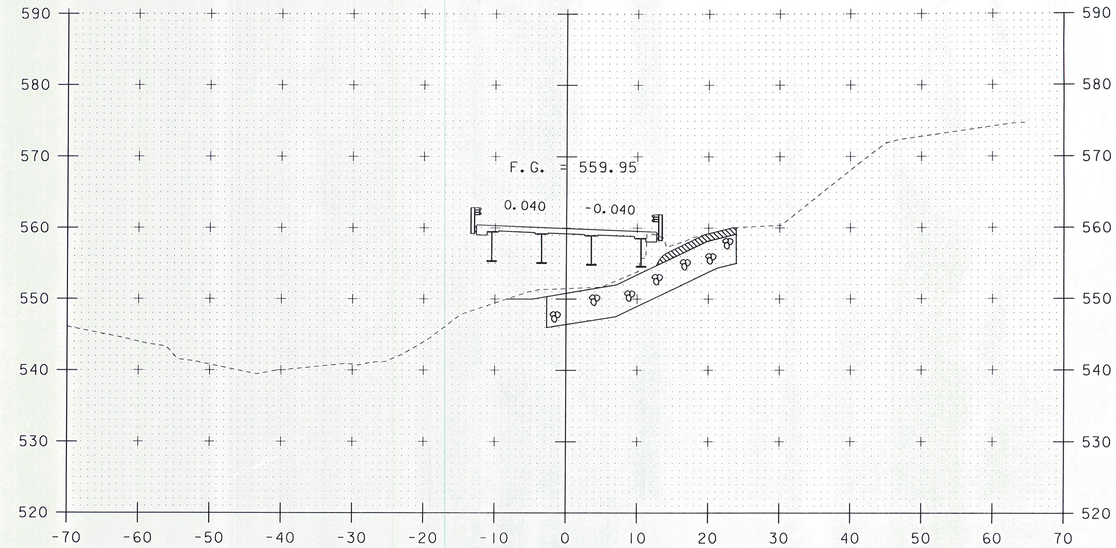

11+75
BEGIN BRIDGE @ 11+54.72

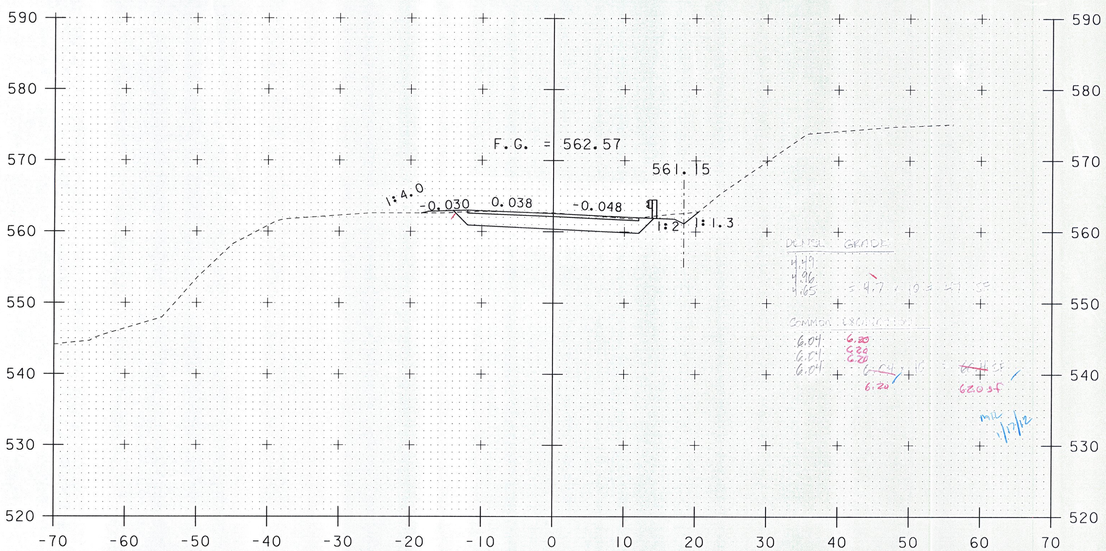

BEGIN PROJECT
11+00

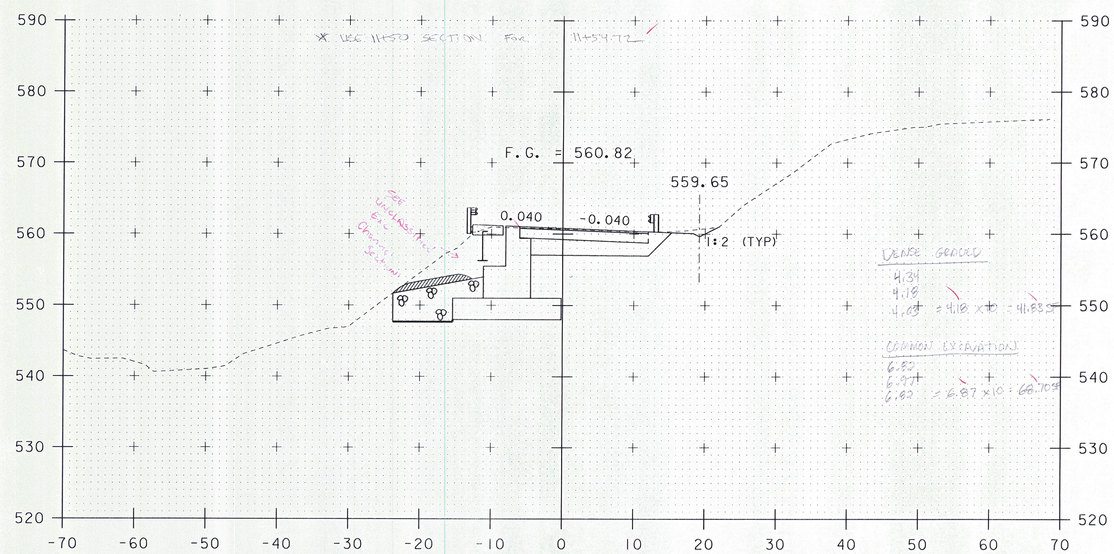

11+50

SCALE 1" = 10'-0"
10 0 10

STA. 11+00 TO STA. 11+75

PROJECT NAME: SPRINGFIELD	
PROJECT NUMBER: BRO 1442(26)	
FILE NAME: s95j282xsl.dgn	PLOT DATE: 30-AUG-2011
PROJECT LEADER: K. HIGGINS	DRAWN BY: J. SALVATORI
DESIGNED BY: J. SALVATORI	CHECKED BY: J. LACROIX
ROADWAY CROSS SECTIONS - 2	SHEET 45 OF 52