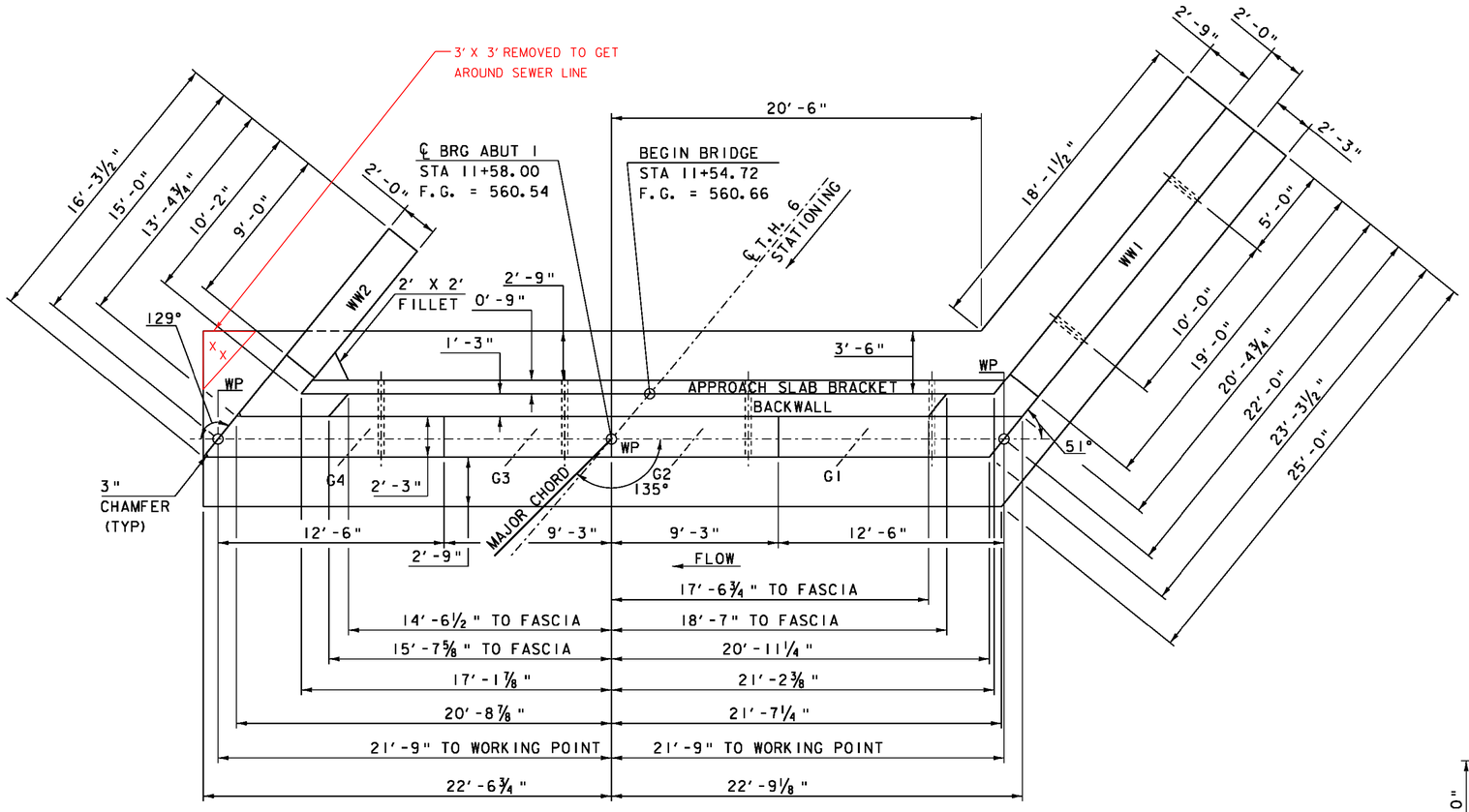

ABUTMENT 1 PLAN

SCALE ¼" = 1'-0"

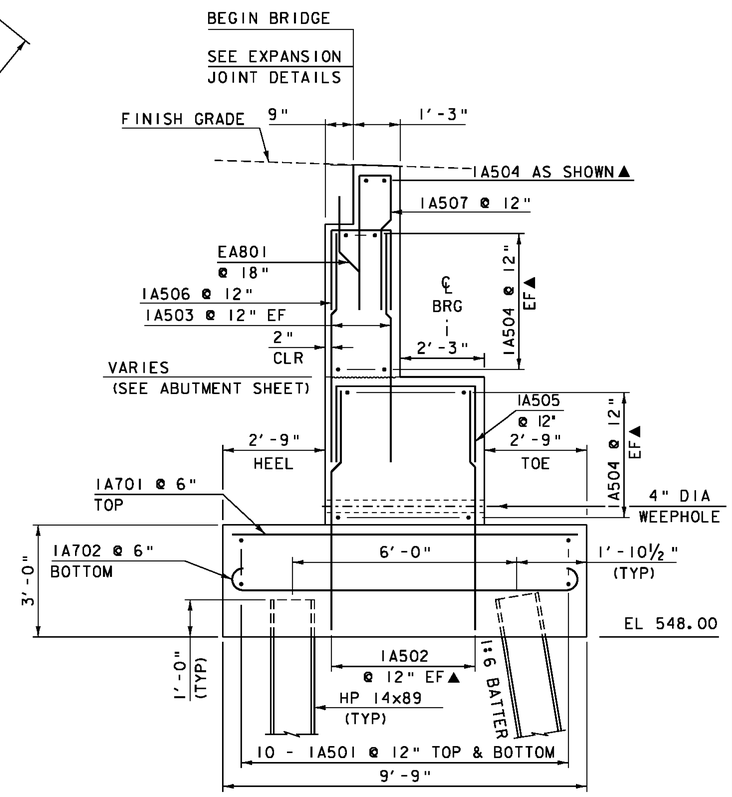

ABUTMENT 1 TYPICAL SECTION

SCALE ½" = 1'-0"

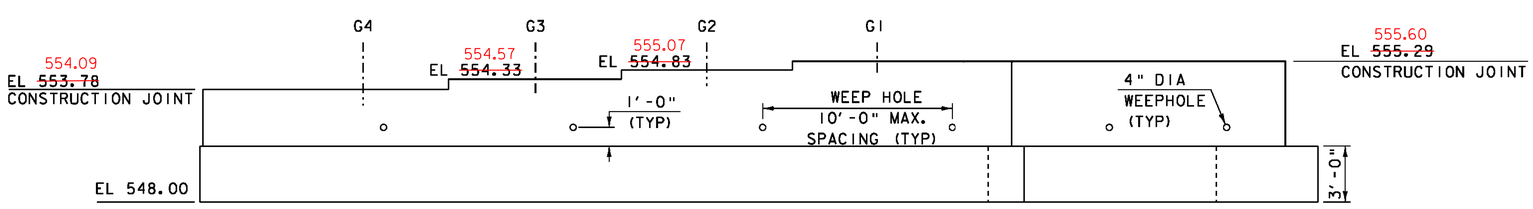

ABUTMENT 1 ELEVATION

SCALE ¼" = 1'-0"

NOTE:

BACKWALL AND WINGWALLS NOT SHOWN

PROJECT NAME: SPRINGFIELD	
PROJECT NUMBER: BRO 1442(26)	
FILE NAME: s95j282sub.dgn	PLOT DATE: 30-AUG-2011
PROJECT LEADER: K. HIGGINS	DRAWN BY: R. PELLETT
DESIGNED BY: J. GRIFFIN	CHECKED BY: J. LACROIX
ABUTMENT 1	SHEET 26 OF 52