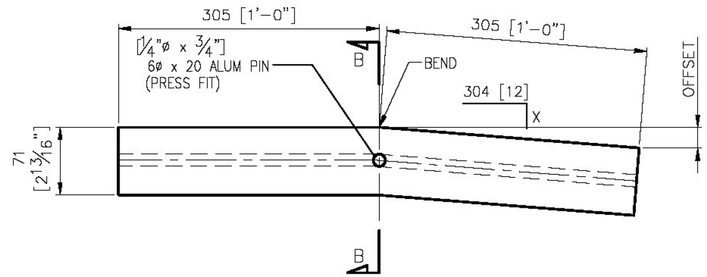

REAR ELEVATION VIEW

MOD. BARRIER RAIL SPLICES				
MK.	X	QTY.	OFFSET	
SS-23-A1	32 [1 1/4]	1	32 [1 1/4"]	1
SS-23-A2	17 [1 1/16]	1	17 [1 1/16"]	1
SS-23-A3	34 [1 5/16]	1	33 [1 5/16"]	1
SS-23-A4	19 [3/4]	1	19 [3/4"]	1

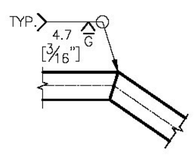

TYPICAL WELD DETAIL
@ MITERED SPLICES (OPTIONAL IF REQ'D.)

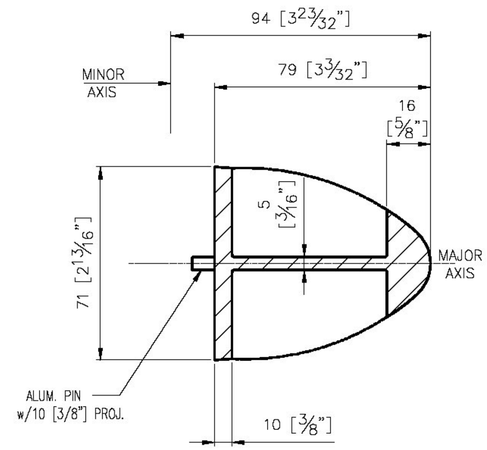

SECTION B-B

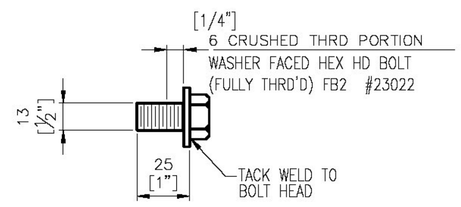

SPLICE BOLT DETAILS

FASTENERS & HOLES WILL BE SUPPLIED IN STANDARD US EQUIVALENT UNITS FOR THE METRIC DESIGNATIONS.

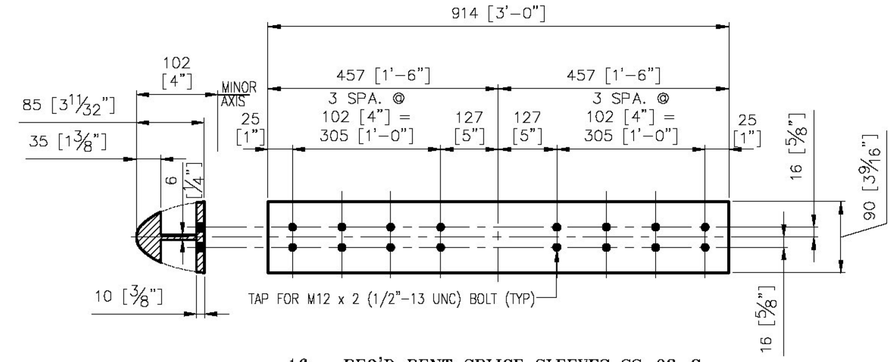

16 ~ REQ'D BENT SPLICE SLEEVES SS-03-G
(BARRIER RAIL - BACK ELEV VIEW) #19501 (EXTR.)

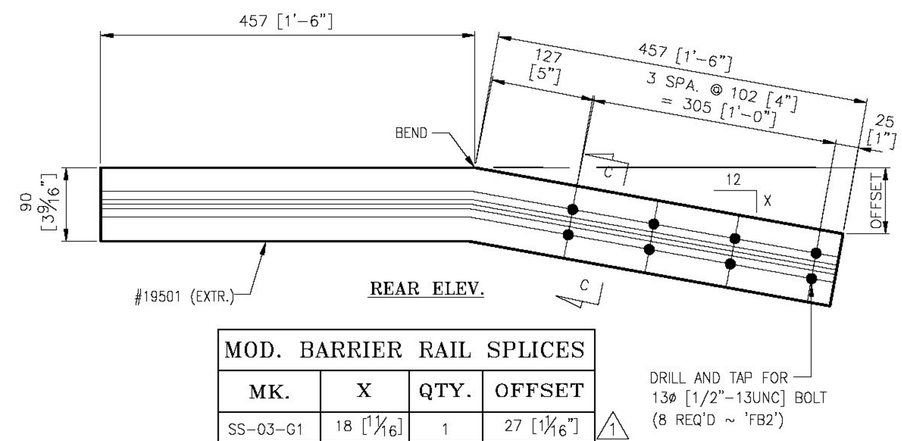

REAR ELEV.

MOD. BARRIER RAIL SPLICES				
MK.	X	QTY.	OFFSET	
SS-03-G1	18 [1 1/16]	1	27 [1 1/16"]	1
SS-03-G2	12 [1/2]	1	18 [1 1/16"]	1
SS-03-G4	3 [1/8]	1	5 [3/16"]	1
SS-03-G7	5 [3/16]	1	7 [1/4"]	1

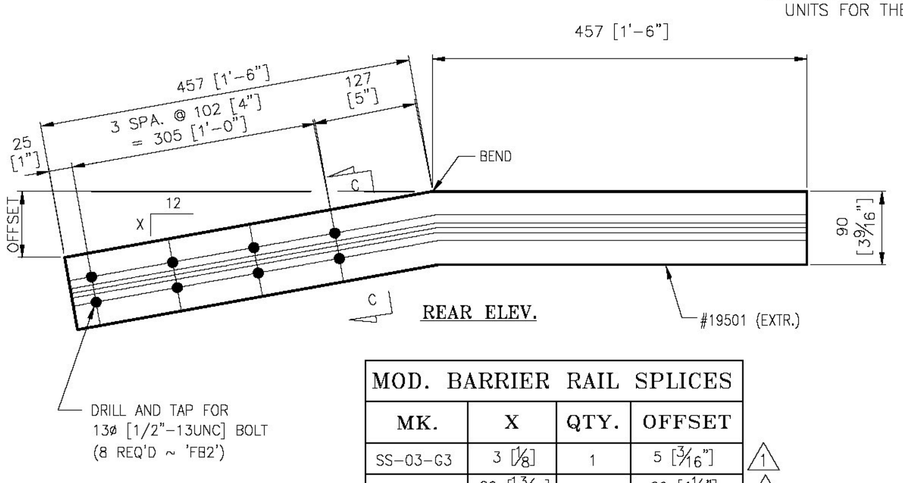

REAR ELEV.

MOD. BARRIER RAIL SPLICES				
MK.	X	QTY.	OFFSET	
SS-03-G3	3 [1/8]	1	5 [3/16"]	1
SS-03-G5	20 [13/16]	1	29 [1 1/8"]	1
SS-03-G6	14 [9/16]	1	21 [13/16"]	1
SS-03-G8	1 [1/16]	1	1 [1/16"]	2

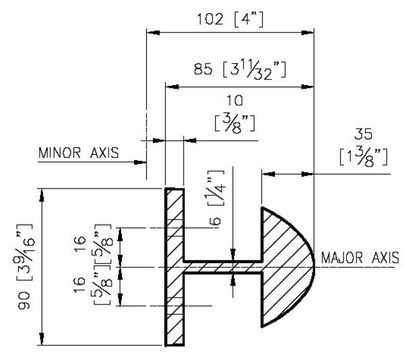

SECTION C-C

NOTE:
PRIMARY DIMENSIONS ARE METRIC UNITS IN MM. DIMENSIONS SHOWN [ ] THUS ARE THE ENGLISH CONVERSION.

Vermont Agency of Transportation
RECEIVED
CK'D BY GFR OK'D BY
03/29/2012
RESUBMIT APPROVED X
BY C. CARLSON DATE 03/30/2012

ITEM No.621.745

APPROVED: REC'D APPROVAL DRAWING

ANODIZED
(SEE NOTES ON LB1)

L.B. FOSTER COMPANY
1016 GREENTREE ROAD
PITTSBURGH, PENNSYLVANIA 15220

FOR: F. R. LAFAYETTE, INCORPORATED
VERMONT AGENCY OF TRANSPORTATION
COUNTY OF WINDHAM - TOWN OF NEWFANE - PROJ. #BRF 0106(3)S
3L ALUM APPROACH RAILING - RTE: TH2 CLASS 2 (MAJOR COLLECTOR)
BRIDGE 14 OVER MARLBORO BRANCH - SPLICE DETAILS

REV.	DESCRIPTION	BY	DATE
2	REVISED PER APPROVER MARKUPS	CMS	03 29 12
1	REVISED PER APPROVER MARKUPS	CMS	03 23 12

MADE CMS DATE 02/02/12 JOB No. AR0720 CUST. No.
CHECK Dd DATE 02/13/12 DRAWING LB12 REV. No. 2