Metric

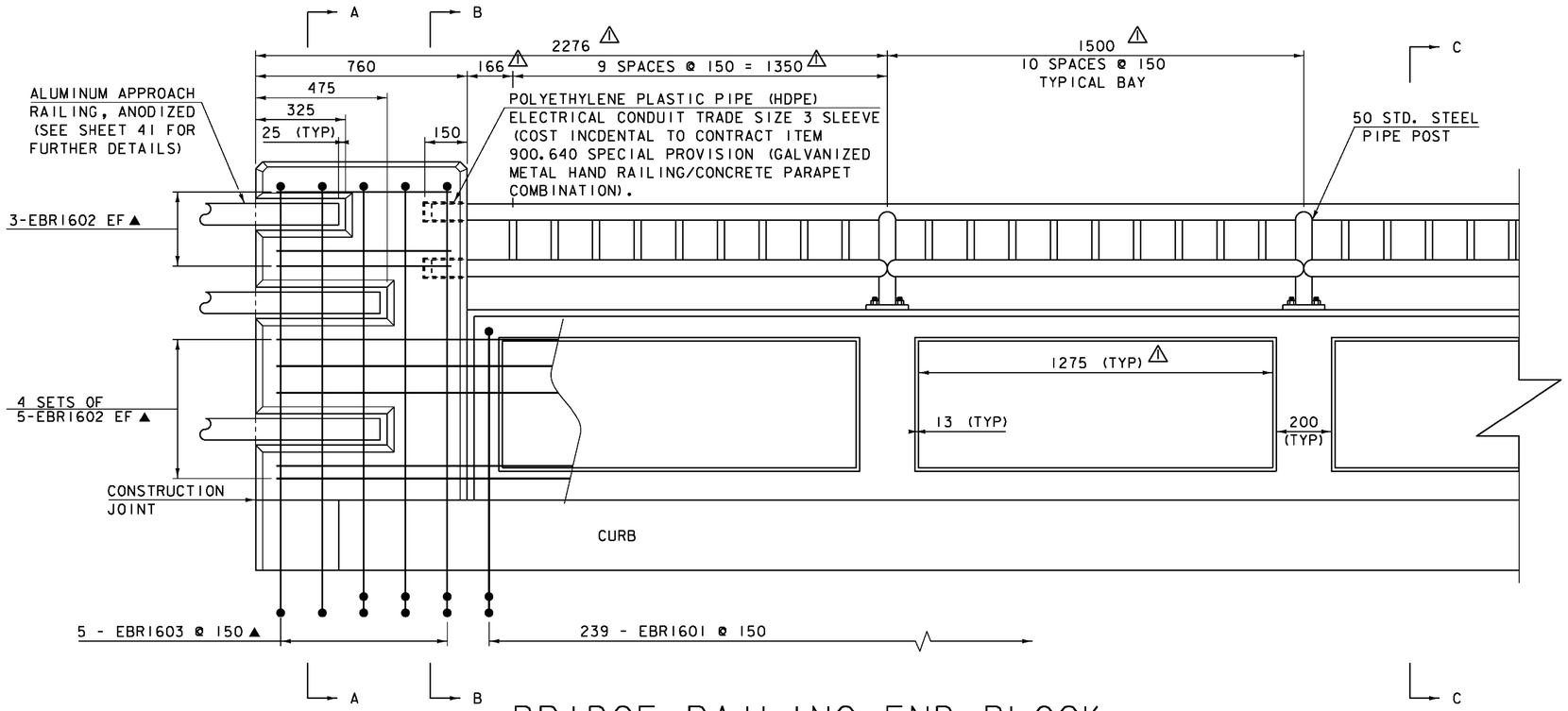

BRIDGE RAILING END BLOCK INTERIOR FACE ELEVATION

SCALE 1:10

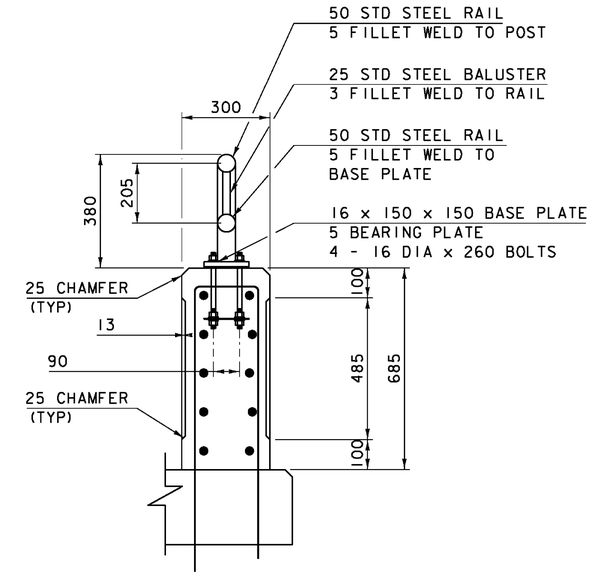

PARTIAL BRIDGE RAILING INTERIOR SECTION C-C

SCALE 1:10

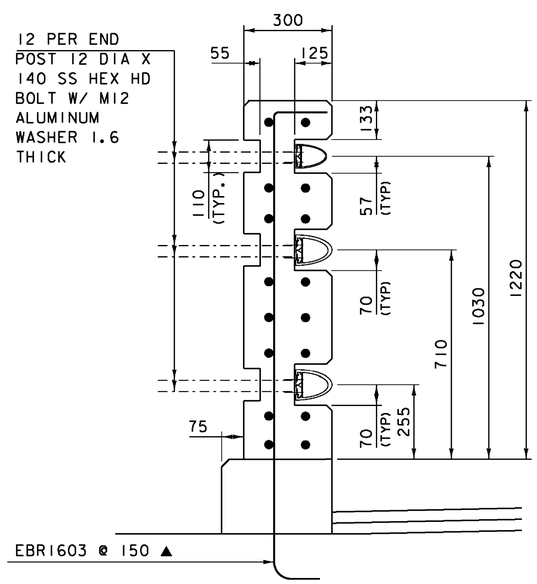

BRIDGE RAILING END BLOCK SECTION A-A

SCALE 1:10

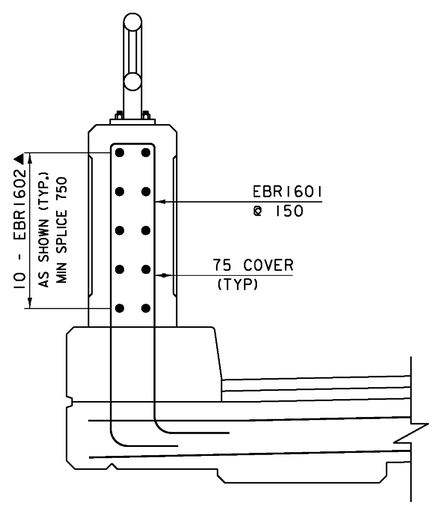

CONCRETE RAIL REINFORCMENT (CURB SIDE)

SCALE 1:10

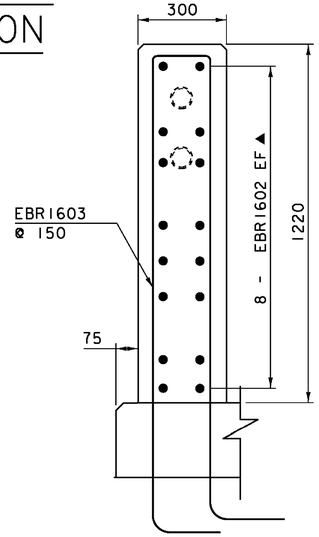

BRIDGE RAILING END BLOCK SECTION B-B

SCALE 1:10

NOTES:
NF = NEAR FACE
FF = FAR FACE
EF = EACH FACE
▲ = CUT TO FIT IN FIELD
80 COVER UNLESS OTHERWISE SPECIFIED ON THE PLANS

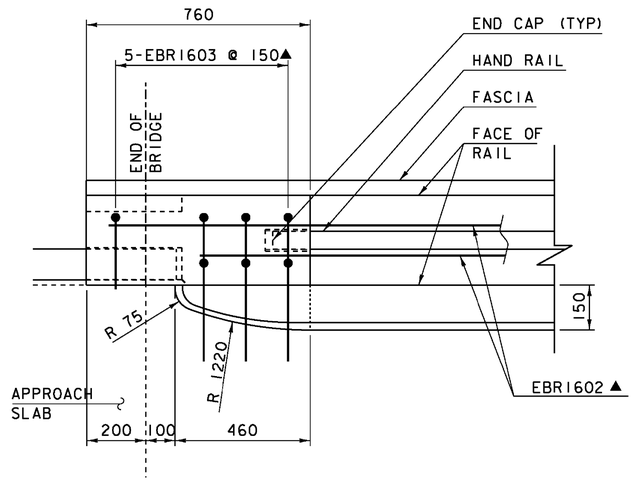

BRIDGE RAILING END BLOCK PLAN

SCALE 1:10

KEY	DATE	BY	REVISION
1	06/19/2012	VAOT	MODIFIED METAL RAILING LAYOUT.

PROJECT NAME: NEWFANE
PROJECT NUMBER: BRF 0106(3)S

FILE NAME: s95j280raildet.dgn
PROJECT LEADER: C. CARLSON
DESIGNED BY: T. LACKEY
BRIDGE RAILING DETAIL 1

PLOT DATE: 19-JUN-2012
DRAWN BY: C. MOONEY
CHECKED BY: G. SWEENY
SHEET 44 OF 70