Metric

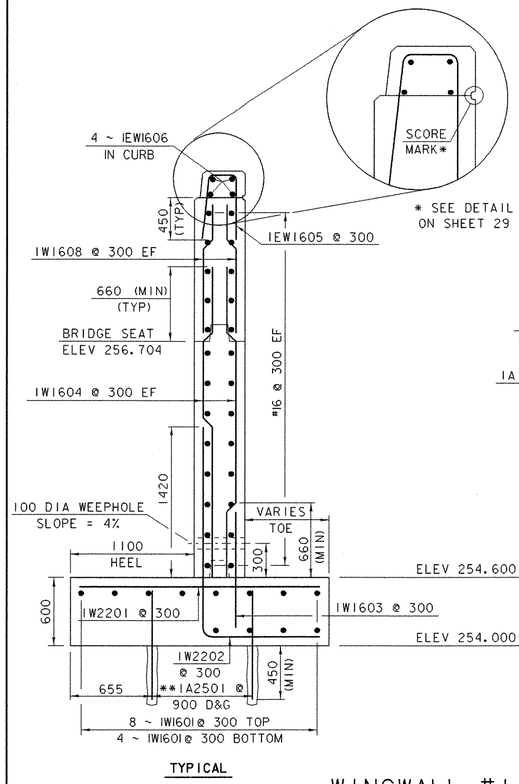

TYPICAL

WINGWALL #1

SCALE: 1:25

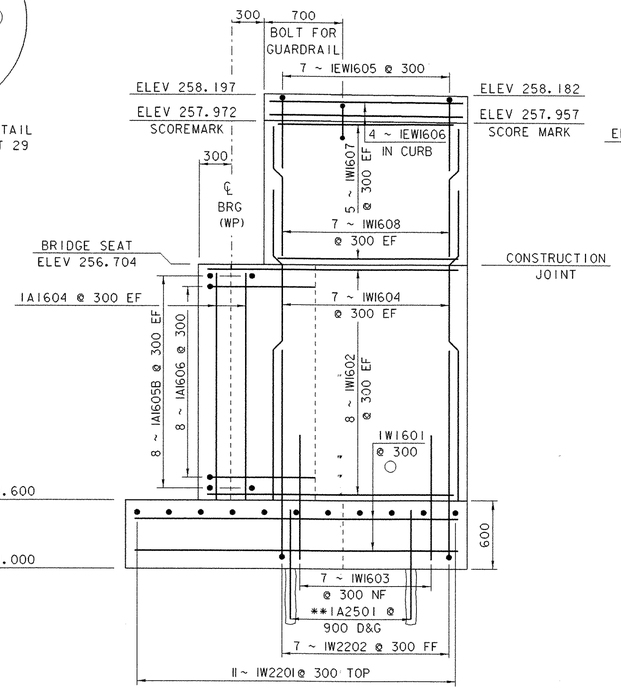

ELEVATION

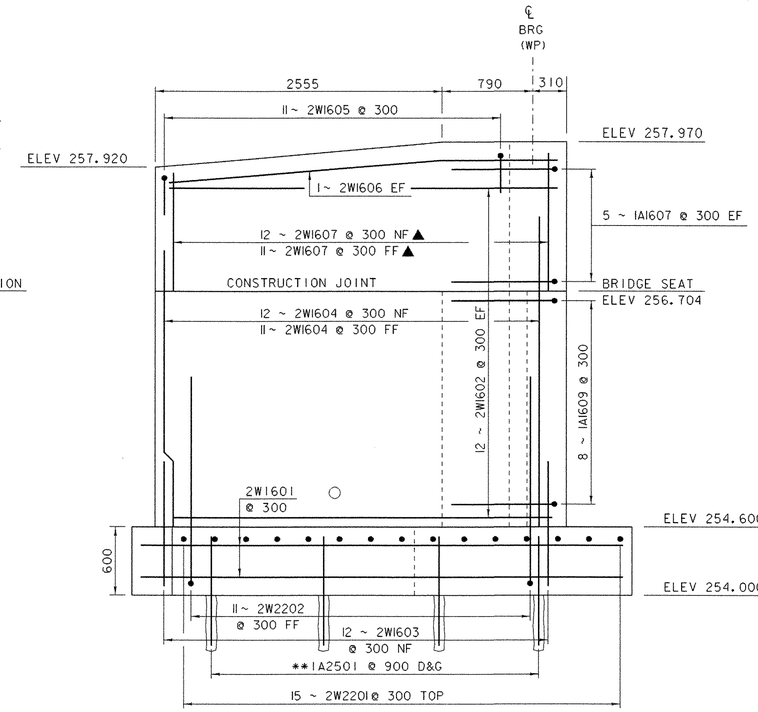

ELEVATION

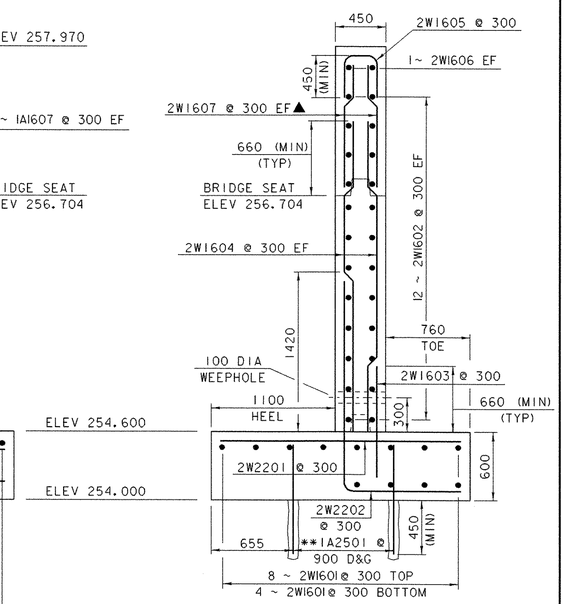

TYPICAL

WINGWALL #2

SCALE: 1:25

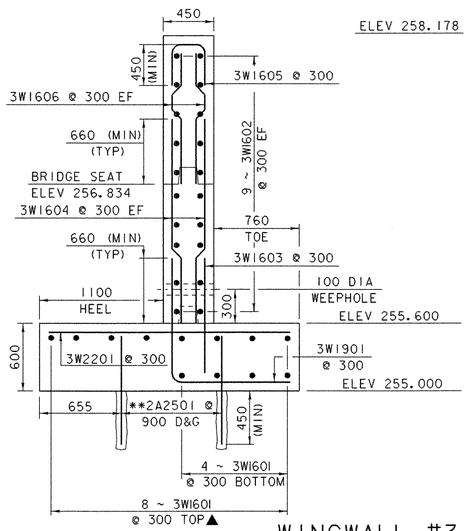

TYPICAL

WINGWALL #3

SCALE: 1:25

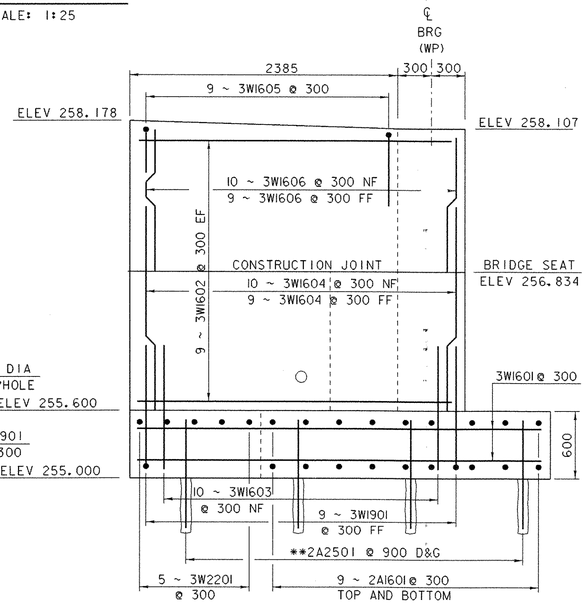

ELEVATION

NOTES:

1. NF = NEAR FACE
2. FF = FAR FACE
3. EF = EACH FACE
4. ▲ = CUT TO FIT IN FIELD
5. 80 CLEAR UNLESS OTHERWISE SPECIFIED ON THE PLANS
6. D&G = DRILL AND GROUT, 450 MINIMUM DEPTH OF GROUTING
7. ** = SEE FOOTING REINFORCING PLANS, SHEET 32 FOR LAYOUT OF 1A2501 AND 2A2501 BARS.

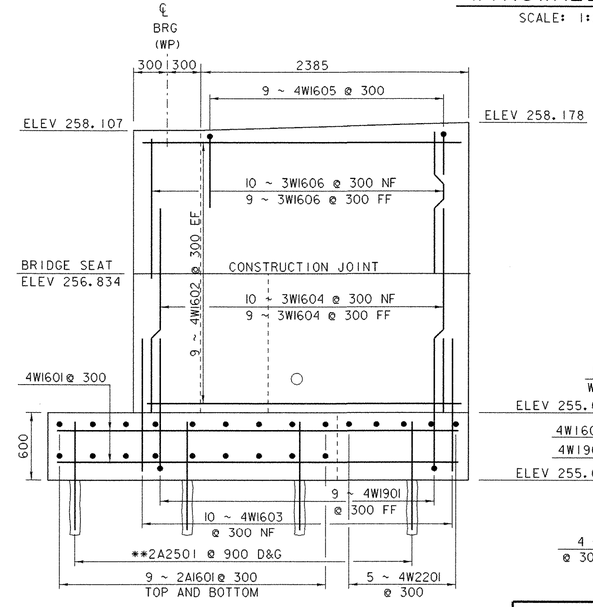

ELEVATION

WINGWALL #4

SCALE: 1:25

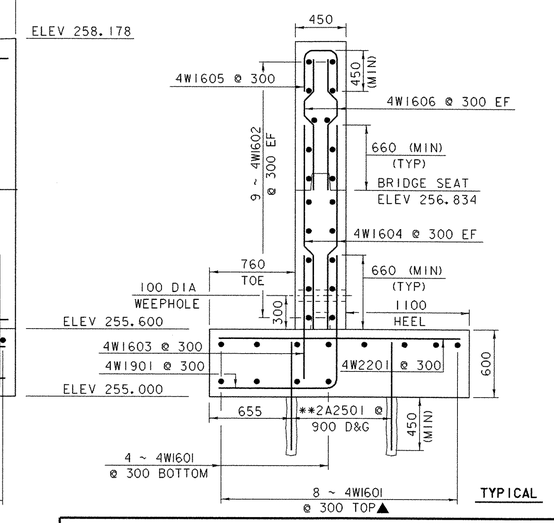

TYPICAL

SHEET NAME: **WINGWALL DETAILS**	
PROJECT NAME: MONTGOMERY PROJECT NUMBER: BRO 1448(20)	HIGHWAY NO.: TH 35 BRIDGE NO.: 24 OVER: PACIFIC BROOK
FILE NAME: /PW/94ji24/sji24sub.dgn PROJECT MANAGER: R. WHITCOMB DESIGNED BY: D.BONNEAU BRIDGE SHEET NUMBER:	PLOT DATE: 06-DEC-2005 DRAWN BY: J. GILMORE IPARM NAME: sji24ww.i SHEET 33 OF 50