NOTES:

1. NF = NEAR FACE
2. FF = FAR FACE
3. EF = EACH FACE
4. ▲ = CUT TO FIT IN FIELD
5. 80 CLEAR UNLESS OTHERWISE SPECIFIED ON THE PLANS
6. 3000 MAXIMUM WEEPHOLE SPACING
7. SEE SHEET 29 FOR ADDITIONAL CURB FLARE DETAILS
8. ** D&G - DRILL AND GROUT MINIMUM OF 450 INTO LEDGE

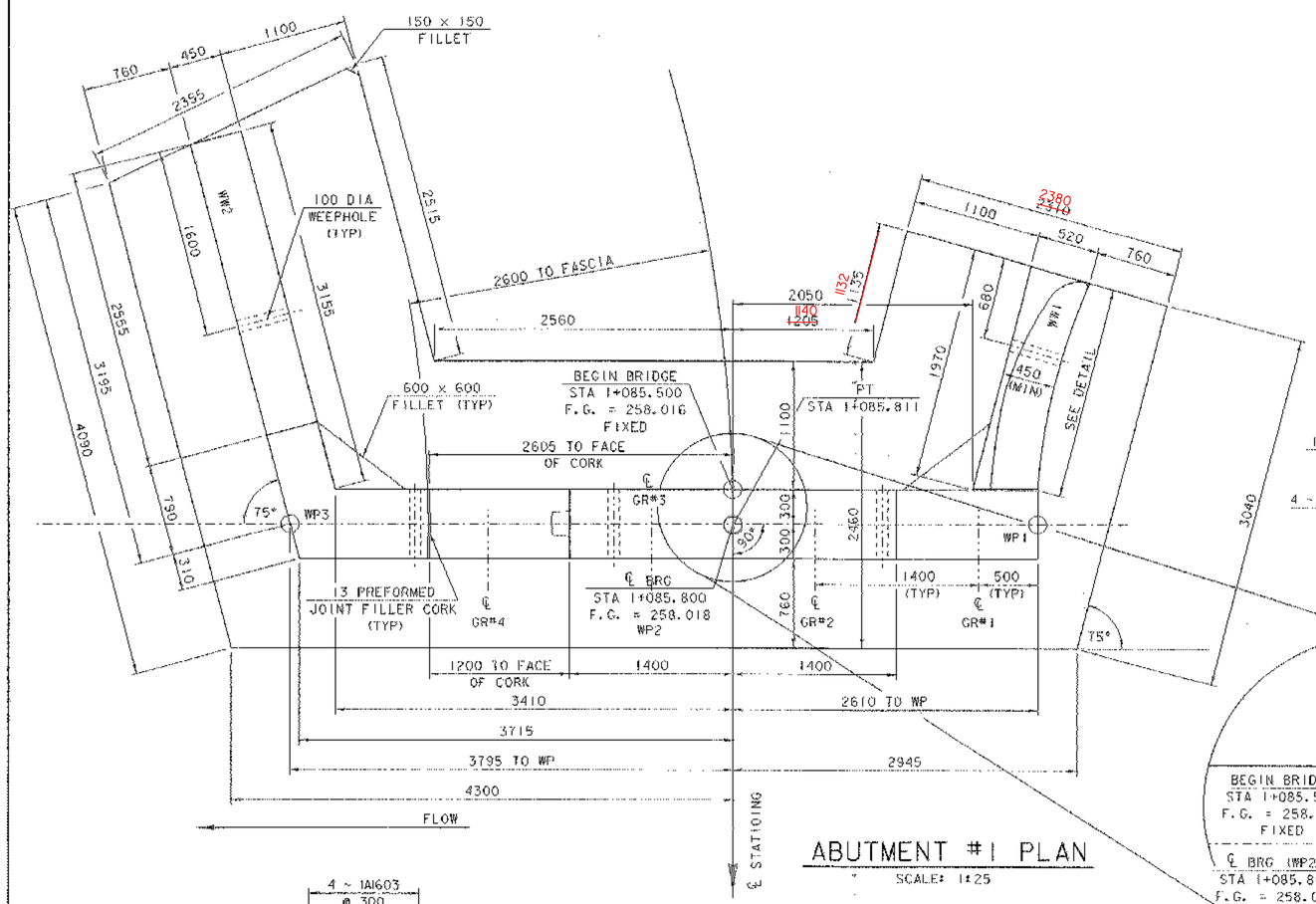

ABUTMENT #1 PLAN

SCALE: 1:25

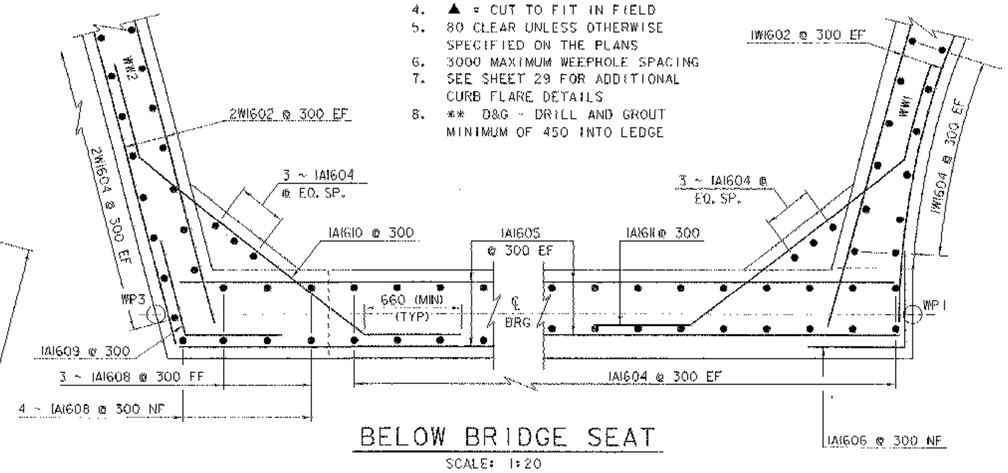

BELOW BRIDGE SEAT

SCALE: 1:20

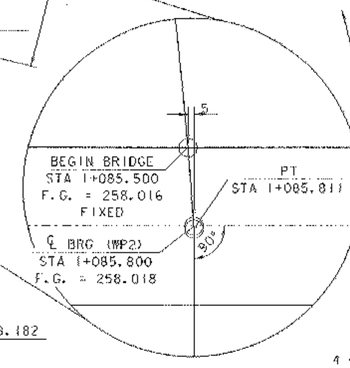

℄ POINTS ABUTMENT #1

NTS

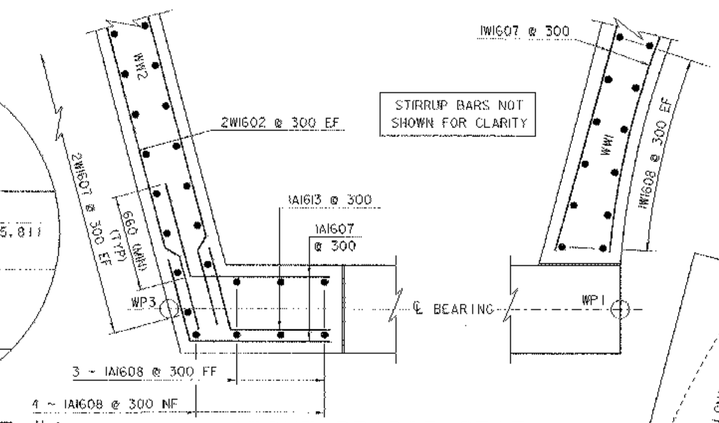

ABOVE BRIDGE SEAT

SCALE: 1:20

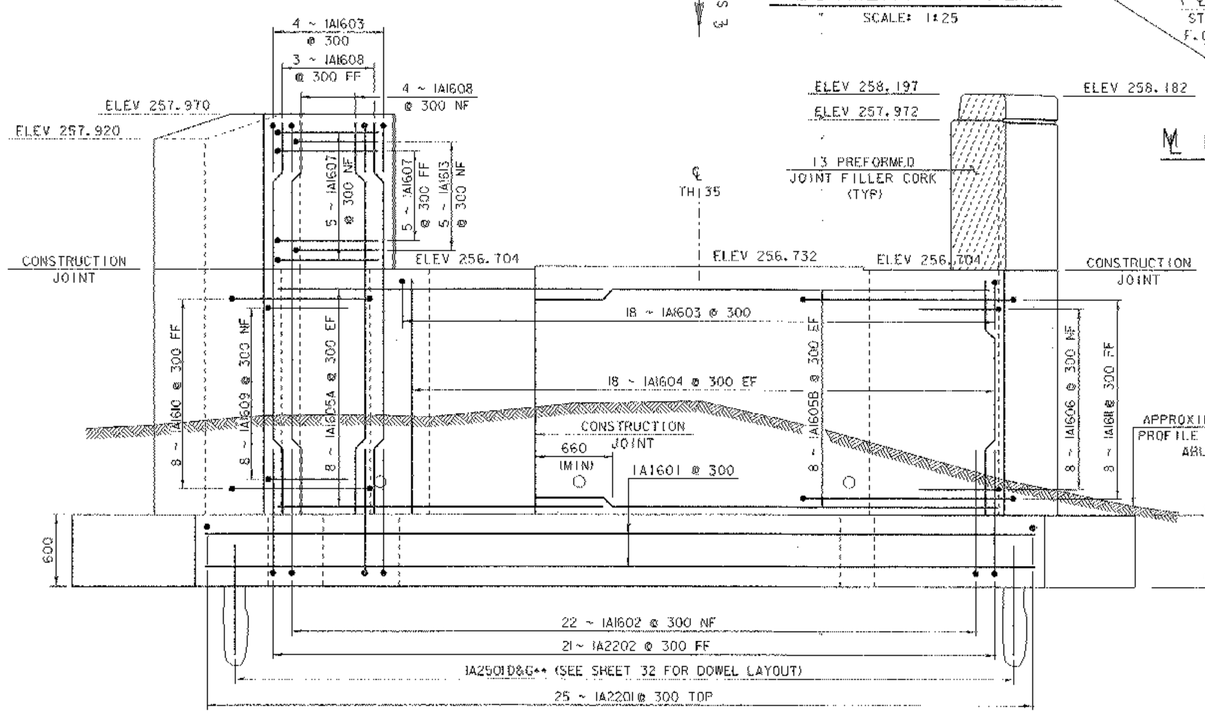

ABUTMENT #1 ELEVATION

SCALE: 1:25

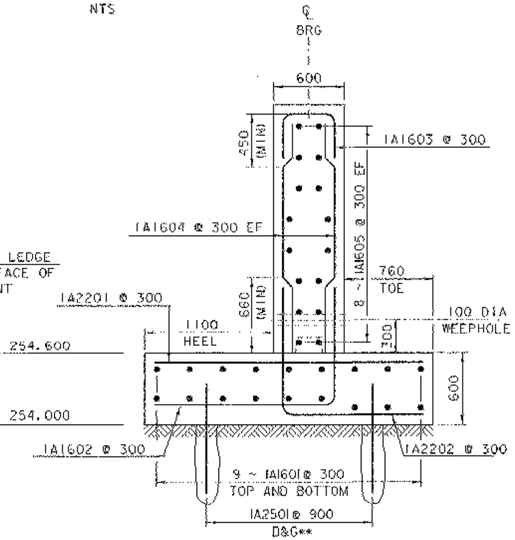

ABUTMENT #1 SECTION

SCALE: 1:25

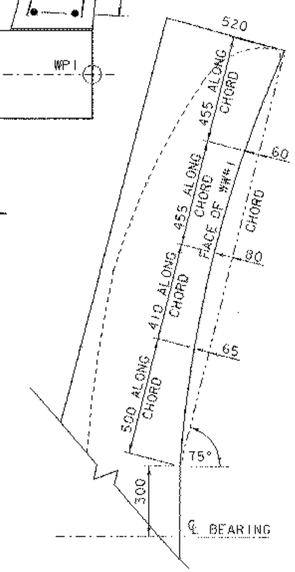

WW#1 CURVED FACE DETAILS

NTS

SHEET NAME:	ABUTMENT #1 DETAILS		
PROJECT NAME:	MONTGOMERY	HIGHWAY NO.:	TH 35
PROJECT NUMBER:	BRO 1448(20)	BRIDGE NO.:	24
		OVER:	PACIFIC BROOK
FILE NAME:	/PW/94J124/sJ124sub.dgn	PLOT DATE:	06-DEC-2005
PROJECT MANAGER:	R. WHITCOMB	DRAWN BY:	J. GILMORE
DESIGNED BY:	D.BONNEAU	IPARM NAME:	sJ124abl.I
BRIDGE SHEET NUMBER:		SHEET	30 OF 50